HIDEN ANALYTICAL

HPR-60 MBMS

The Ultimate Solution for Reactive Gas and Plasma Analysis

Introduction

Introducing the Hiden HPR-60 MBMS System: The Ultimate Solution for Reactive Gas and Plasma Analysis

The Hiden HPR-60 MBMS system is designed for the analysis of reactive gas and plasma-generated species across a wide range of research applications. With a selection of high-performance quadrupole mass spectrometers and a multitude of features, the HPR-60 system is tailored to meet the demands of various experimental conditions and pressure regimes.

Applications:

- Plasma Medicine
- Plasma Surface Modification of Polymers
- Explosive Detection
- Dermatology
- Reactive Gas Monitoring
- Chemical Vapor Deposition (CVD) Coatings
- Catalysis and Environmental Applications
- Fuel Cell Studies
- Textile Treatment
- Food Packaging and Preservation
- Water Treatment and Purification
- Decontamination and Sterilization
- Plasma Agriculture
- Atmospheric Plasma-Enhanced Chemical Vapor Deposition (APCVD)

Key Features

- Positive and negative ion analysis
- Appearance potential spectra for radical analysis
- Electron attachment ionization (EAMS) mode option for electronegative radicals analysis
- Front stage heating option up to 1,000°C
- Molecular beam chopper option for automated beam foreground-background measurement
- Windows® MASsoft Professional PC software with RS232, USB, and Ethernet communication links
- Enhanced pumping for sampling to 5 bar
- Options to configure integral MS for standalone studies in vacuum chamber
- MCS detector option for 50 ns time resolved sampling
- Liquid N_2 cryopanel for parts per billion level studies

EPIC and EQP Series

High-Performance Mass Spectrometers: The Hiden EPIC and EQP Series

Choose from Hiden's EPIC series for neutrals, radicals, and ions analysis, or upgrade to the EQP series for enhanced sensitivity and ion energy analyses. The system mass range can be customized to your application requirements with a variety of options:

Key Features

- EPIC/EQP-6: 300, 510 amu
- EPIC 1,000/EQP-9: 50, 300, 510, 1,000, 2,500, 5,000, 20,000 amu
- EQP-20: 20/200 amu

Energy range is 100 eV as standard, with an optional 1,000 eV available. (EQP-based systems only).

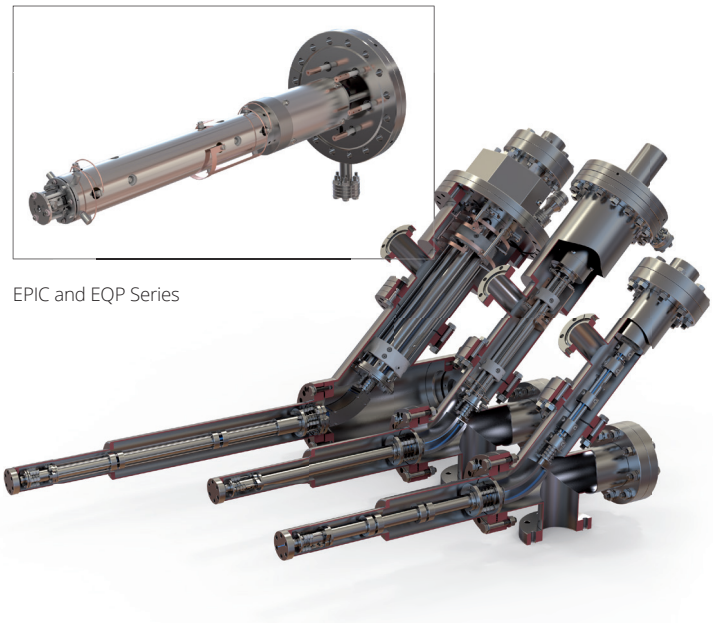

EPIC and EQP Series

Flexible Inlet System Configuration

The HPR-60 inlet system is designed to interface with the desired pressure regime and experimental conditions. Pressure reduction stages with differential pumping and replaceable skimmer cones enable sampling in pressure ranges from atmospheric pressure to 5 bar. High conductance 'low-z' manifolds and tailored skimmer cones allow direct sampling with minimal disturbance of ion and radical species. The modular construction provides flexibility and future upgrade capabilities.

Maintain sample temperature up to 1,000°C from the reactor to the sampling orifice with the optional sample inlet heater interface.

Integrated Beam Stop and Chopper: The HPR-60 system includes a manual beam stop for sample beam-to-background measurement and an optional integrated molecular beam chopper for automated simultaneous acquisition of foreground/background data with real-time molecular beam signal display and instantaneous beam background subtraction.

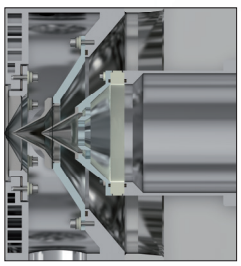

The HPR-60 MBMS offers versatile interfacing capabilities to seamlessly integrate with a variety of experimental setups. It features customizable inlet cone designs, along with mounting holes and areas designed to ensure vacuum seal compatibility, facilitating the construction of your experimental chamber. The specifications of inlet cone sizes, geometries, and materials are highly adaptable to meet the specific needs of end-users.

Operating Modes

MASsoft software offers a variety of pre-set modes, histogram spectra, profile mode, background subtraction, trend analysis, 3D plot mode, socket interface, map mode, electron energy scanning, energy scanning, mixed mode scanning, automatic and manual tuning, data review, data export, email data file handler, and user-configurable alarm outputs.

Experience the versatility and performance of the Hiden HPR-60 MBMS system and elevate your research capabilities in reactive gas and plasma analysis.

Technical Data

HPR-60 System Specifications

The Hiden HPR-60 Plasma Diagnostics System is designed to deliver outstanding performance and versatility for a wide range of applications. Explore the system specifications below to discover how the HPR-60 can support your research and industrial requirements.

Mass Range Options:	0-20 amu/0-200 amu 0-50 amu 0-200 amu	1-300 amu 2-510 amu 2-1,000 amu	10-2,500 amu 10-5,000 amu 100-20,000 amu
Sampling Range:	**Standalone EQP (Optional):**	**3-Stage System**	
	10^{-4} to 2 mbar	10^{-3} to 1,000 mbar Sampling up to 5,00 mbar available	
Mass Resolution:	**EPIC/EQP-6 Systems:**	**EPIC 1,000/EQP-9 Systems:**	**EQP-20 Systems:**
	1 amu at 5% peak height throughout the mass range 1 amu at 10% peak height at mass 28 amu 0.5% Valley between adjacent peaks of equal height	1 amu at 5% peak height throughout the mass range 1 amu at 10% peak height at mass 1,000 amu 4 amu at 10% peak height at mass 2,471 amu 6 amu at 10% peak height at mass 4,808 amu	0.006 amu at 10% peak height at mass 4 (m/Δm = 1,000 FWHM) 0.07 amu at 10% peak height at mass 40 (m/Δm = 600 FWHM)
Detector:	Ion Counting detector for positive and negative ion detection Up to 10^7 counts/s into 24-bit resolution counting electronics Faraday option extends to $5x10^{10}$ Detector Range: $1:10^7$		
Signal Gating:	Detector gating by direct TTL input Gating resolution to 0.1 µs Optional MCS mode with 50 ns time resolution		
Energy Analyser:	45° sector field Energy range 100 eV (1,000 eV optional) Energy pass band 0.5 eV Transmission 100% within pass band		
Ion Source:	Electron impact, radially symmetric with twin filaments		
Mass Filter:	3 stages each of 4 poles Pole diameter: EPIC/EQP-6 systems 6.00 mm, EPIC 1,000/EQP-9 systems 9.00 mm, EQP-20 systems 20.00 mm		
Vacuum Protection:	External trip for remote overpressure protection		

RC 7 Interface to PC:	Up to 15 m with RS232 link Up to 750 m with unbridged Ethernet link 5 m Ethernet and 5 m RS232 cables included
Power Requirement:	100-240 Vac, 50-60 Hz, 1.0 kVa
Software:	MASsoft Professional Windows compatible

The Hiden HPR-60 Plasma Diagnostics System provides a comprehensive suite of specifications to meet the demands of various applications. Choose the system configuration that best suits your needs and enjoy a powerful, adaptable solution for your research or industry.

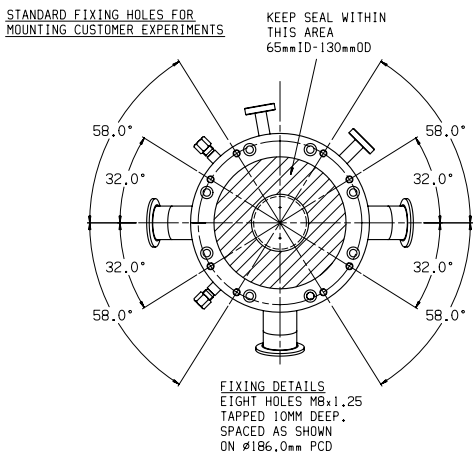

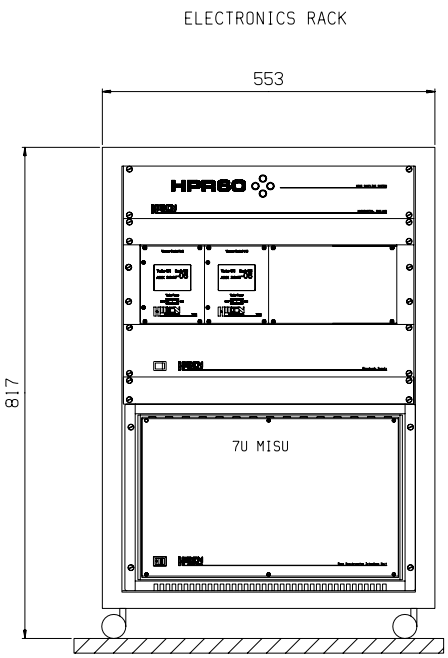

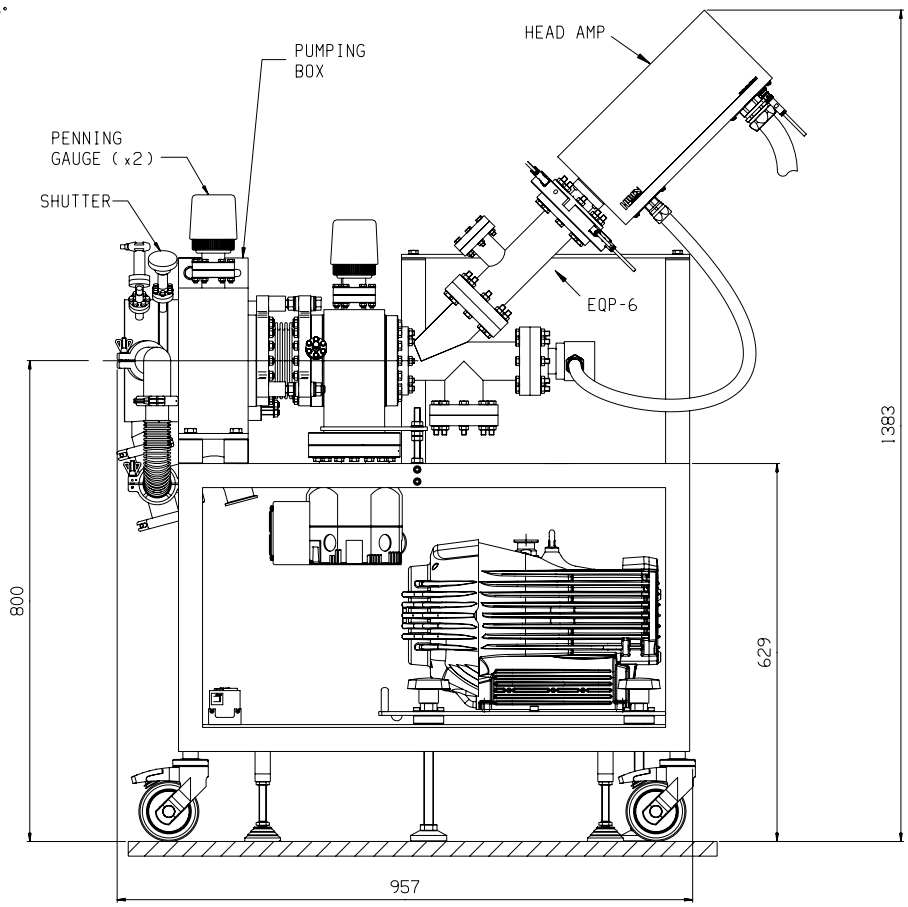

Inlet options

HPR-60 Inlet Options: Customised Solutions for Your Unique Needs

The Hiden HPR-60 Plasma Diagnostics System offers a variety of inlet options designed to enhance its performance and adaptability, ensuring that it meets the specific needs of your research or industrial applications. Explore our range of inlet options to find the perfect fit for your unique requirements.

1. LIQUID NITROGEN IONISER CRYOPANEL

The liquid nitrogen ioniser cryopanel significantly increases pumping speeds for condensable background gases such as water vapor and hydrocarbons. This results in an optimal detection level down to ppb (parts per billion) analyses.

2. HPR-60 1,000°C INLET HEATER INTERFACE

Customize your HPR-60 system with a high-performance inlet heater designed for sampling condensable gases and vapors up to 1,000°C.

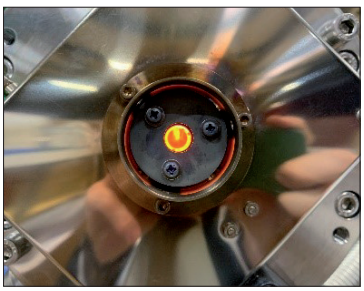

HPR-60 1,000°C Inlet Heater Interface.

3. MOLECULAR BEAM CHOPPER SYSTEM

This innovative system enables automated beam foreground-background measurement with beam chopping rates up to 360 Hz.

The chopper assembly is integrated between the differential pumping stages of the HPR-60 system, and a software package provides real-time data acquisition and display.

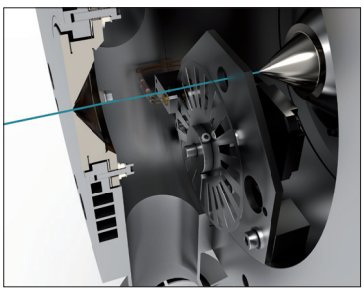

Molecular Beam Chopper System.

4. OPTIONAL SAMPLING TO 5 BAR

For applications requiring sampling up to 5 bar, we offer an enhanced option, comprising additional pumping capacity.

5. ADDITIONAL CONFIGURATION FOR STANDALONE MS OPERATION IN LOW PRESSURE PLASMA

This option allows the integral EQP MS system to be removed and used for the analysis of low-pressure plasmas in the region of 2 mbar to 10^{-4} mbar. The package includes:

- EQP cover tube for differential pumping in low pressure plasmas
- User-replaceable orifice plates to match plasma chamber pressure
- 400 mm standard chamber insertion from the mounting flange (adaptors available)
- Compatible scroll and turbomolecular pumps and controllers with the HPR-60

With the Hiden HPR-60 Plasma Diagnostics System and a wide range of inlet options, customers have the opportunity to create a customized solution tailored to their specific needs. Hiden's team of experts are available to discuss the optimal configuration and inlet options for specific application requirements.

Data

Characterisation of Atmospheric Plasma Devices

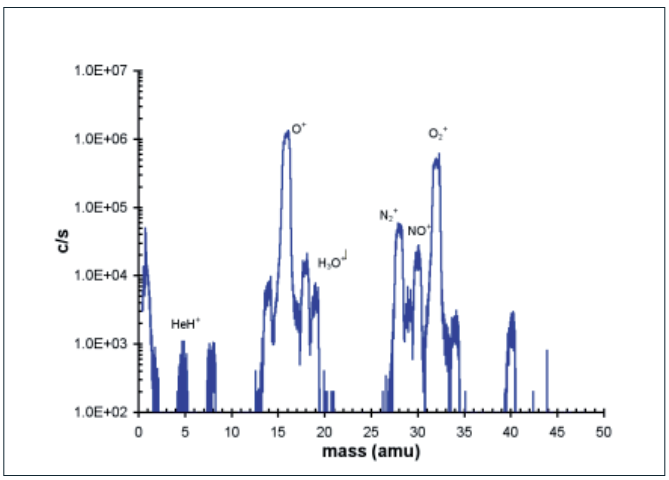

Positive ion mass spectrum from a typical atmospheric treatment device.

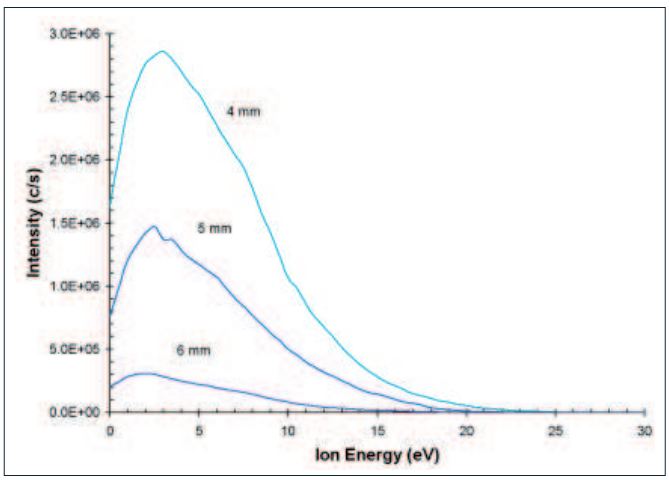

Nitrogen Ion Energy Distribution as a function of distance from an atmospheric plasma treatment device.

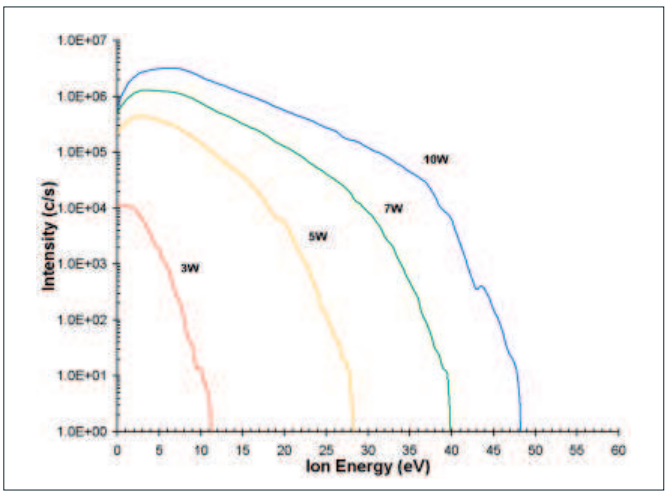

Oxygen ion energy as a function of plasma power from an atmospheric plasma treatment device

Both the composition and quantity of plasma-generated nitrogen and oxygen ions are dependent on specific physical and technical plasma source and device parameters as working gas composition, power input, or distance from the plasma source. These phenomena can be seen in the figures above.

Hiden**APPLICATIONS**

Hiden's quadrupole mass spectrometer systems address a broad application range in:

GAS ANALYSIS

- dynamic measurement of reaction gas streams
- catalysis and thermal analysis
- molecular beam studies
- dissolved species probes
- fermentation, environmental and ecological studies

SURFACE ANALYSIS

- UHV TPD/TDS
- ToF qSIMS and SIMS analysers
- end point detection in ion beam etch
- elemental imaging – 3D mapping

PLASMA DIAGNOSTICS

- plasma source characterisation
- etch and deposition process reaction kinetic studies
- analysis of neutral and radical species

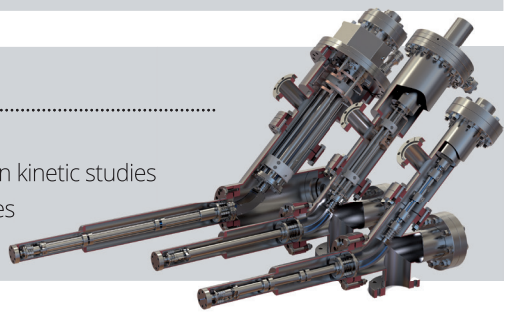

VACUUM ANALYSIS

- partial pressure measurement and control of process gases
- reactive sputter process control
- vacuum diagnostics
- vacuum coating process monitoring

HIDEN ANALYTICAL

Hiden Analytical Ltd.
420 Europa Boulevard
Warrington WA5 7UN England

T **+44 [0] 1925 445 225**
E **info@hiden.co.uk**
W **www.HidenAnalytical.com**

Sales Offices:

We have sales offices situated around the globe. **Visit our website for further information.**