HIDEN ANALYTICAL

QGA 2.0 Next Generation Gas Analyser

The latest advancement in gas analysis technology

Introduction

A compact bench-top gas analyser configured for real-time, multi-species analysis with wide dynamic range – 100 ppb to 100%

Applications:

- Carbon capture
- Hydrogen analysis
- Environmental monitoring
- Gas production and storage
- Fuel cell studies
- High purity gas analysis
- Fermentation off-gas analysis
- Thermal analysis
- Gas reaction studies
- Catalysis
- TPD/R/O

Key Features

- **Sensitivity:** Detection from 100 ppb to 100%.
- **Response:** Less than 300 ms response time.
- **Precision:** <±2% RD.
- **Performance:** Capable of 1000 measurements per second with a 7 decade dynamic range.
- **Lightweight & Compact Design:** Weighing less than 30 kg with a 42% smaller footprint than the QGA system.
- **Simplified Start-up:** Single button combines pump down and MS electronics start.
- **Advanced Electronics Package:** The redesigned electronics package ensures enhanced functionality and easier servicing.
- **Compatibility:** The QGA 2.0 is compatible with a range of interfaces.
- **Hydrogen-Compatible Vacuum System:** With optional high performance gas dilution and purge function.
- **QGAsoft:** Customised software package for quantitative gas analysis.
- **Sustainability:** The QGA 2.0 is more environmentally friendly, utilizing fewer materials in its construction.

Software

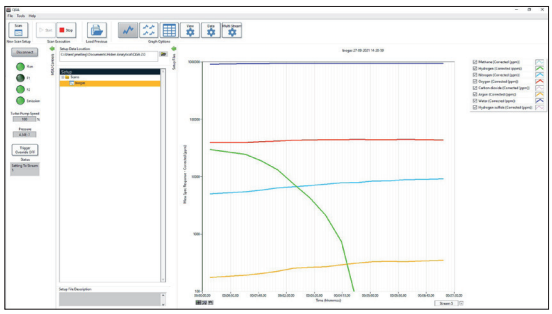

QGAsoft Homescreen

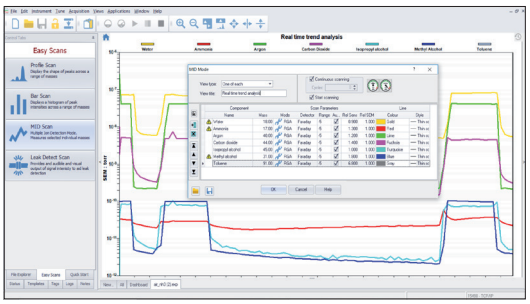

MASsoft Professional – Overview

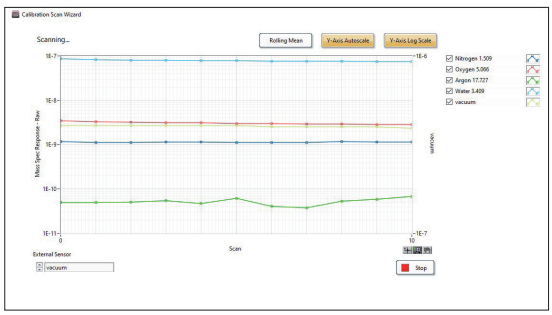

QGAsoft Calibration

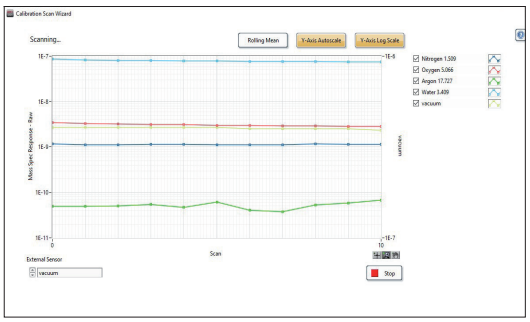

Trend Analysis (MID Setup)

QGAsoft

For quantitative gas and vapour analysis providing real-time continuous analysis of up to 32 species with concentrations measured in the range 100 ppb to 100%.

Key Features

- automatic calibration with background correction
- automatic subtraction of spectral overlaps
- quantitative analysis of up to 32 gases
- 10 peak spectral library with intelligent library scan feature
- automatic triggering of analysis from an external input
- x-axis can display time or an external input, e.g. temperature

MASsoft Professional

A multi-level software package allowing both simple control of mass spectrometer parameters and complex manipulation of data plus control of external devices.

Key Features

- profile, bar and multiple ion detection (MID) modes
- mass spectrometer ionisation energy control for soft ionisation of complex mixtures
- export data to NIST MS database for analysis of unknowns
- export to external data analysis software, e.g. Excel, Origin
- control of external devices e.g. MFCs, gas switching/sampling valves and furnace PID controllers
- output data as percentage or ppm values
- real-time subtraction of overlapping peaks
- scan templates for fast setup of scans
- user selected alarm facilities

Technical Data

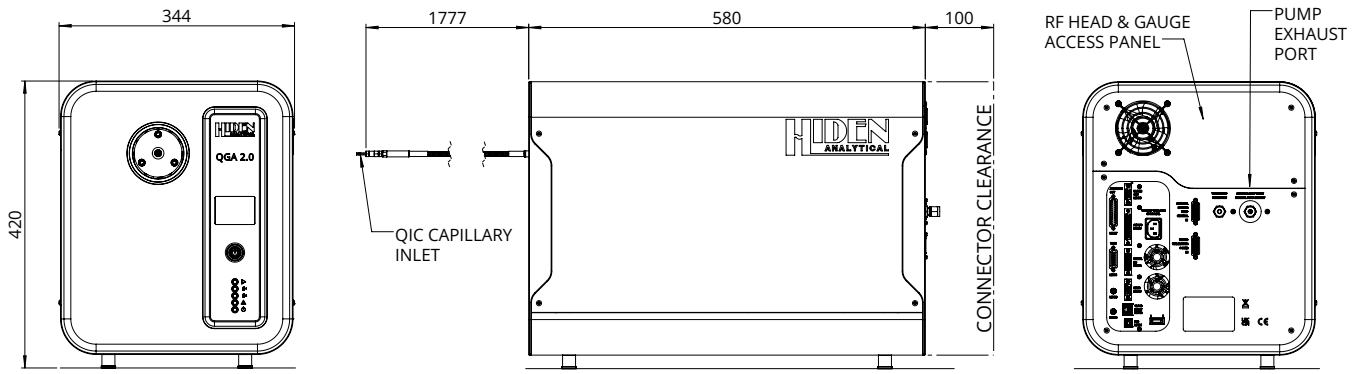

Mass ranges:	1-200 / 1-300 amu
Sensitivity:	100 ppb to 100% subject to spectral interference
Speed:	Up to 1000 measurements/second
Response time:	300 ms
Software:	QGAsoft & MASsoft Professional
	Windows compatible
Dimensions (L x W x H), mm:	580mm x 344mm x 420mm
Weight, kg:	29.5kg – 33.5kg, depending on configuration
Interface:	Ethernet/USB/serial (RS-232) connections
Gas consumption rate:	16/8/3.2/0.8 sccm (user configurable)
Capillary operating temperature, °C:	Up to 200°C
Detector:	Dual Faraday/Channeltron Electron Multiplier

System Configuration & Options

ITEM	DESCRIPTION	PARTCODE
SYSTEM	QGA 2.0 bench-top gas analysis system, including Hiden HAL 201 RC mass spectrometer with Faraday Multiplier detector. Mass range 200 amu. Includes internal membrane pump. QGAsoft & MASsoft Professional included as standard. Includes standard QIC capillary inlet for operation up to 200°C	305150
OPTIONS & ACCESSORIES	Extended mass range. 300 amu mass range (in place of standard 200 amu mass range)	305113
	High performance external scroll pump	303750
	Gas dilution with inert gas purge	303601
	Corrosion resistant upgrade	303604
	CO Analyser 0 - 10,000 ppm range	303595
	QIC heated capillary inlet filter (2 µm)	303576
SPARES KIT	Recommended spares kit ▸ Replacement capillary liner ▸ Replacement leak orifice ▸ Twin filament	303147
INTERFACE OPTIONS	QIC inlet adapters for TA-MS - Custom designed interfaces to suit a broad range of TGA instruments for evolved gas analysis	303580-585
MULTI-STREAM SELECTOR MANIFOLDS	MSV 8-way multi-stream valve	303679
	20-way Proteus multi-stream valve	303650
	40-way Proteus multi-stream valve	303660
	80-way Proteus multi-stream valve	303670
SOFTWARE OPTIONS	EGAsoft - application specific software program for evolved gas analysis, TA-MS and TPD studies	800295

Hiden**APPLICATIONS**

Hiden's quadrupole mass spectrometer systems address a broad application range in:

GAS ANALYSIS

- Dynamic measurement of reaction gas streams
- Catalysis and thermal analysis
- Molecular beam studies
- Dissolved species probes
- Fermentation, environmental and ecological studies

SURFACE ANALYSIS

- UHV TPD/TDS
- ToF qSIMS and SIMS analysers
- End point detection in ion beam etch
- Elemental imaging – 3D mapping
- SIMS system with simultaneous dual polarity analysis

PLASMA DIAGNOSTICS

- Plasma source characterisation
- Etch and deposition process reaction kinetic studies
- Analysis of neutral and radical species

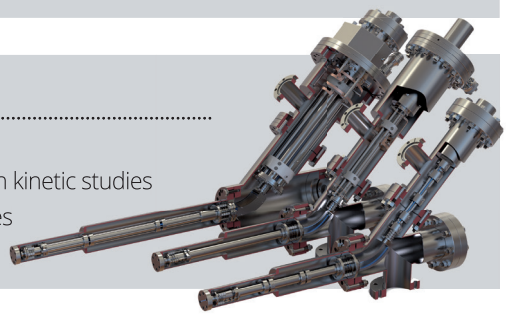

VACUUM ANALYSIS

- Partial pressure measurement and control of process gases
- Reactive sputter process control
- Vacuum diagnostics
- Vacuum coating process monitoring

HIDEN ANALYTICAL

Hiden Analytical Ltd.
420 Europa Boulevard
Warrington WA5 7UN England

T **+44 [0] 1925 445 225**
E **info@hiden.co.uk**
W **www.HidenAnalytical.com**

Sales Offices:

We have sales offices situated around the globe. **Visit our website for further information.**