HIDEN ANALYTICAL

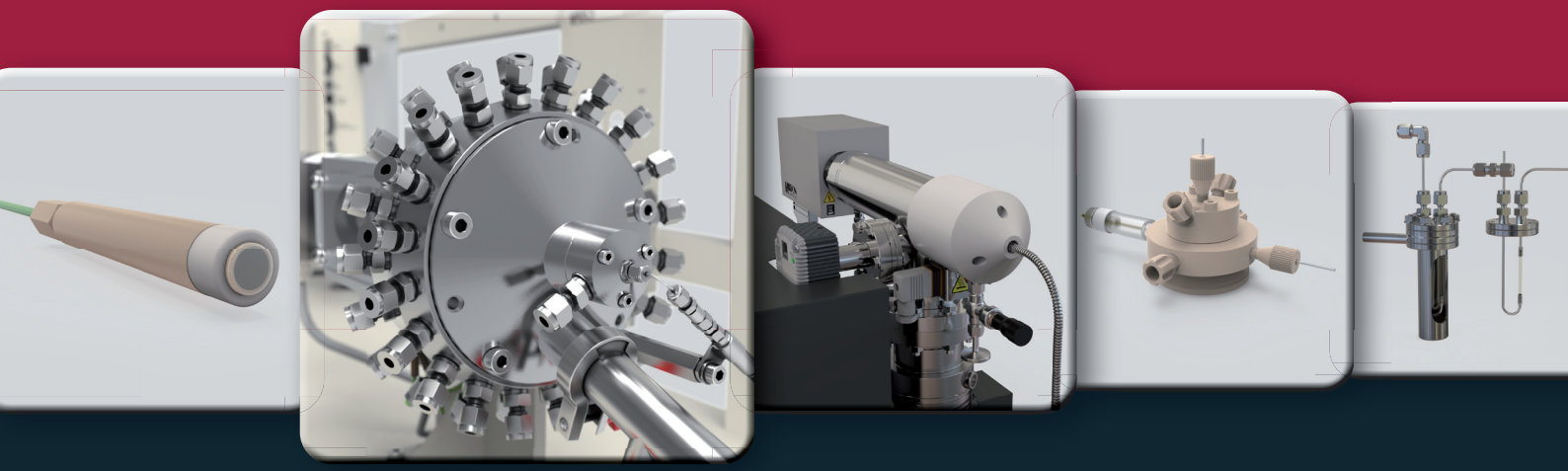

Sampling Inlets for Hiden Mass Spectrometers

Gas, Vapour and Liquid Sampling Systems

Hiden Gas Analysis systems are versatile. Inlet systems are user interchangeable, allowing for transformation of your mass spectrometer to suit new or multiple application requirements.

Gas Sampling Inlets

For a wide range of sample flow rates, and sample pressure ranges

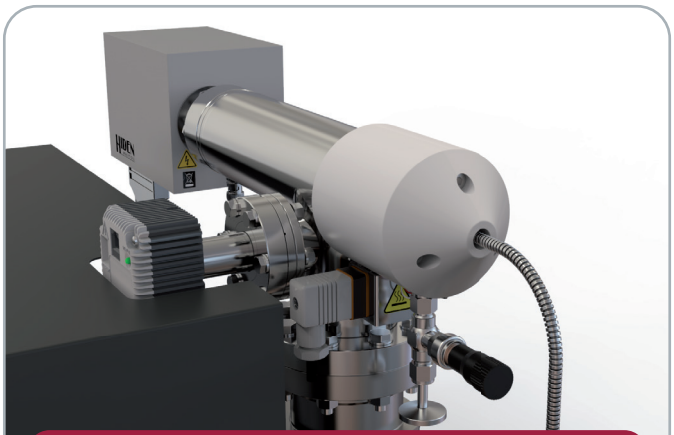

STANDARD QIC – QUARTZ INERT CAPILLARY

- Sample pressure range 2 bar to 100 mbar
- Operates up to 200°C
- Capillary length: 1.8 m (standard)
- Fast 300 ms sampling response
- Sample consumption rates from 0.8 to 20 ml/min
- Swagelok 1/16" or 1/8" connection
- Corrosion resistant option available
- Fast response 0.9 m capillary also available, with sample consumption rates from 1.6 to 20 ml/min
- Flexible construction

LOW PRESSURE STAINLESS STEEL CAPILLARY

- Sample pressure range 250 to 25 mbar
- Operates up to 200°C
- Capillary length: 0.9 m
- All stainless steel assembly
- Swagelok 1/16" or 1/8" connection
- Interchangeable with regular capillary in standard QIC systems
- Corrosion resistant option available

ULTRA-LOW FLOW QIC HEATED CAPILLARY INLET

- For evolved gas studies. For OEMS, online electrochemical MS, where evolved gas flow is limited
- Sample consumption rate of 250 µl/min
- Operates up to 200°C

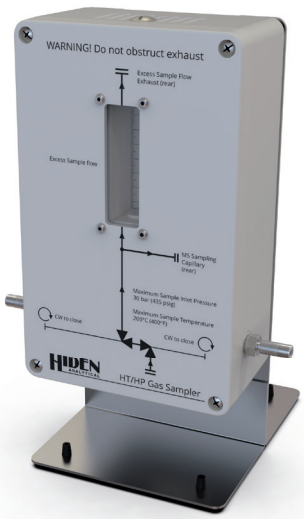

HT/HP GAS SAMPLER

- Sample pressure range 0.1 to 30 bar
- Connects to standard QIC Inlet
- Heated to 200°C

MICRO-FLOW INLET

- Sampling rate 12.5 µl/min. 25 µl/min option
- Single or multi-capillary inlet option
- 8 – 16 s response. Specially engineered to maintain a good response

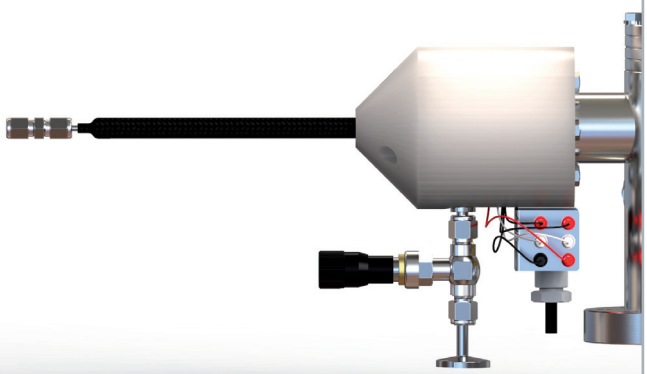

VERY LOW PRESSURE SAMPLING INLET

- Sample pressure range 10 to 1 mbar
- Heated to 120°C
- Capillary length: 0.3 m
- Swagelok 1/8" connection
- Rigid construction

TRI-VALVE SAMPLING HEAD

- Sample pressure range <10^{-4} mbar to 1000 mbar
- Flexible connection to process chamber
- Automatic sample line switching

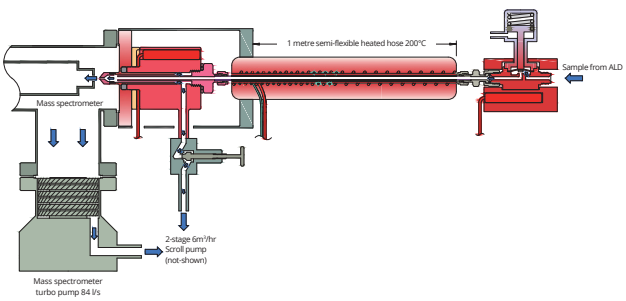

SGL – HEATED LOW PRESSURE INLET WITH ISOLATION VALVE

- For sampling ALD processes with options from 0.1-5 mbar or 5-50 mbar
- Heated to 200°C
- Air actuated heated (200°C) isolation 'ALD' valve included

Multistream Gas Sampling Inlets

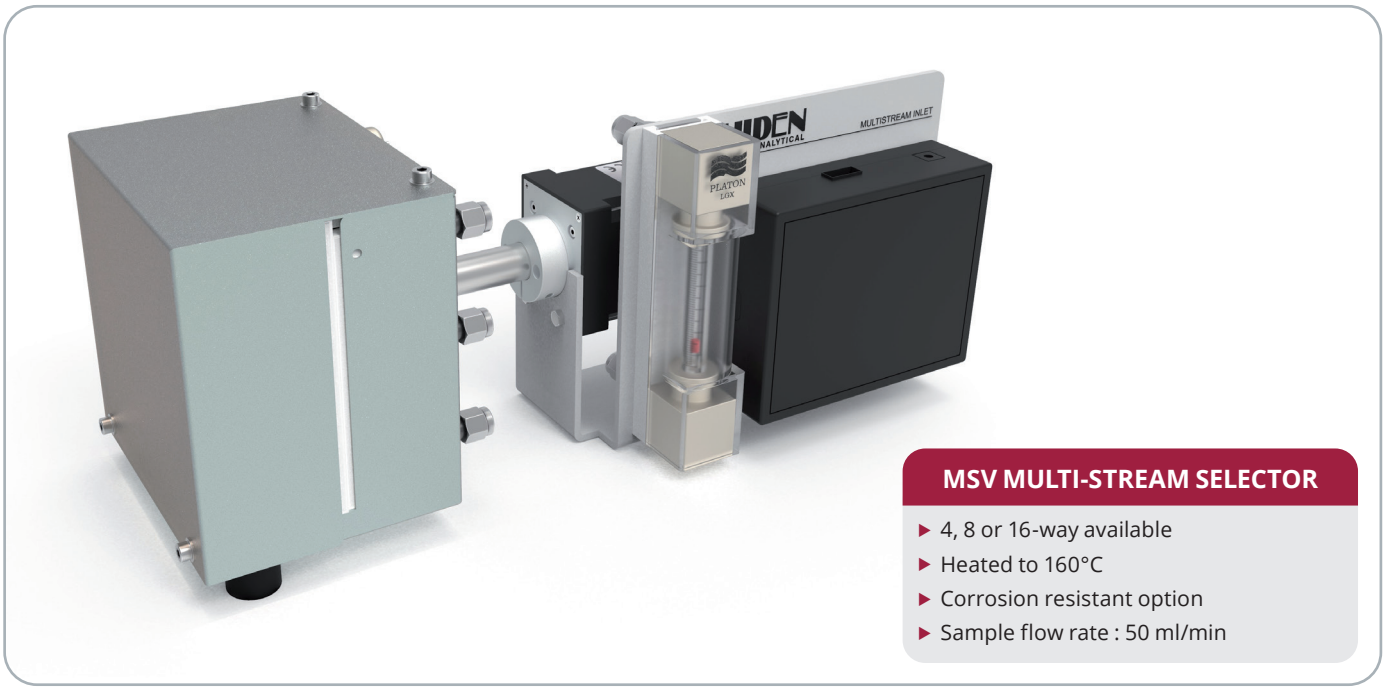

MSV MULTI-STREAM SELECTOR

- 4, 8 or 16-way available
- Heated to 160°C
- Corrosion resistant option
- Sample flow rate : 50 ml/min

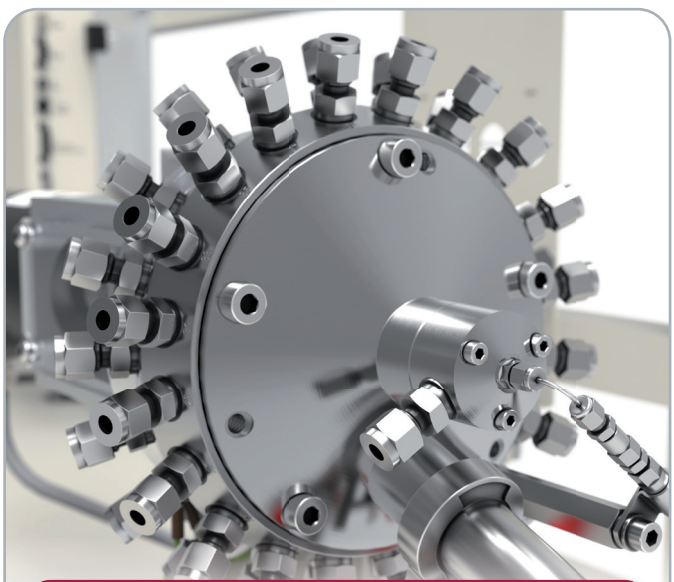

PROTEUS

- 20, 40, 80-way multi-port valve
- Heated to 120°C
- Standard flow > 100 ml/min
- Low flow configuration – from 4 ml/min
- High flow configuration – to 10 l/min
- No crosstalk between streams

TWIN CAPILLARY INLET

- Typical application – measuring input and output of reaction vessel
- Operates up to 160°C
- Fast switching valve between capillaries - less than one second
- Two capillaries of either 0.9 m or 1.8 m

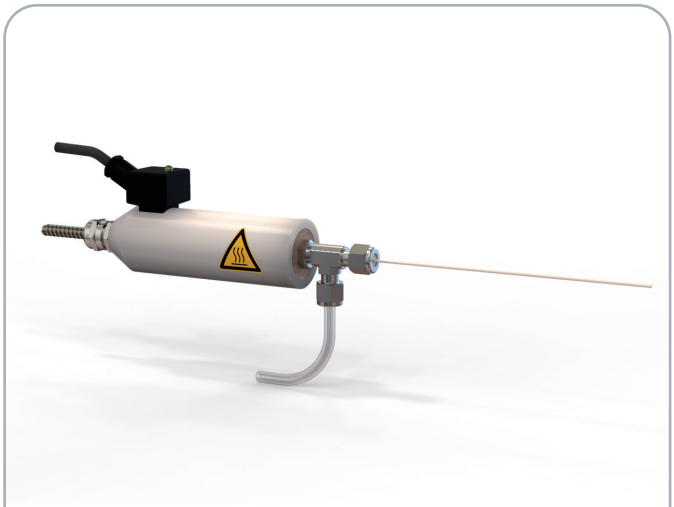

HOT-ZONE INLET

- For sampling from furnaces; interface from furnace to QIC
- Includes heated filter assembly
- Allows direct sample analysis to 1700°C
- General design to suit most furnaces

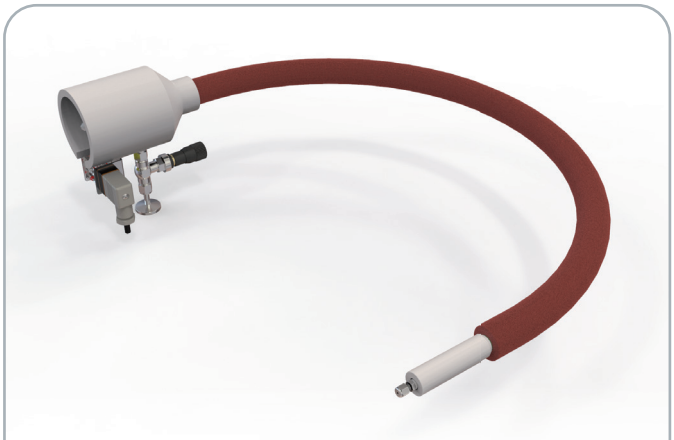

QIC HT250 INLET

- Sample pressure range 2 bar to 100 mbar
- Heated to 250°C (HT250) / 450°C (HT450)
- Sample consumption rates from 0.8 to 20 ml/min
- Capillary length: 1.8 m
- Swagelok 1/16" or 1/8" connection
- Interchangeable with standard QIC Inlet
- Corrosion resistant option available
- Flexible and robust steel hose

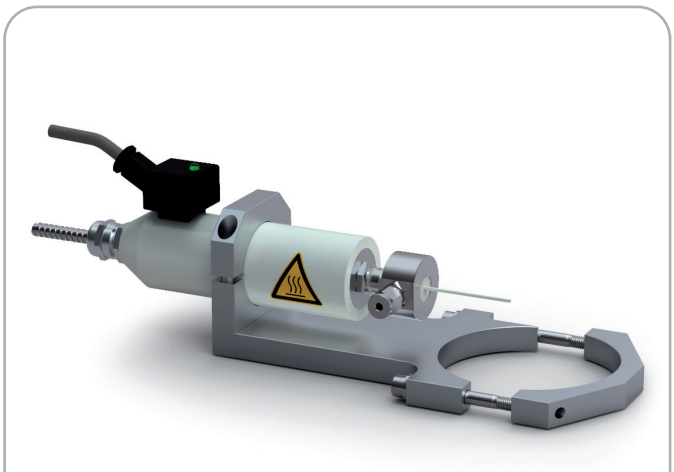

TGA-MS

- A range of interfaces are available for TGA-MS evolved gas analysis
- Specially designed to suit designated TGA instrument
- Most manufacturers and models covered

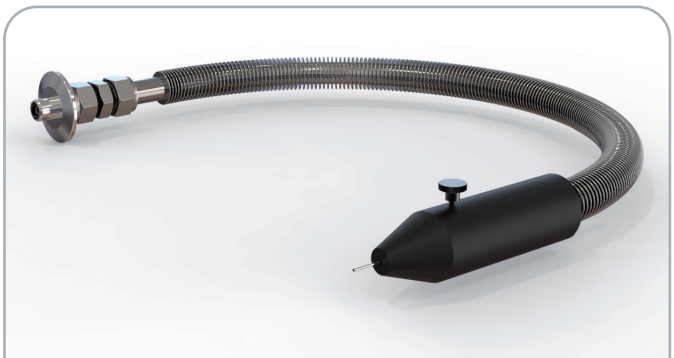

QIC GLOVEBOX

- Heated to 200°C
- Provides low dead volume interface with glovebox

QIC HEATED EXTENSION

- Available as an upgrade to standard QIC capillaries
- Extends length by 2 m (standard extension) or 4 m, 6 m on request
- Operates up to 200°C

Gas Sampling Inlets for

Analysis of dissolved gases in liquids

MIMS PROBE

- Designed for direct, in-situ analysis of static samples where pumping or flow is not possible
- Suitable for liquids and slurries, including fermenter liquors and heterogeneous matrices
- Ideal for robust, flexible sampling across single or multiple static sample environments

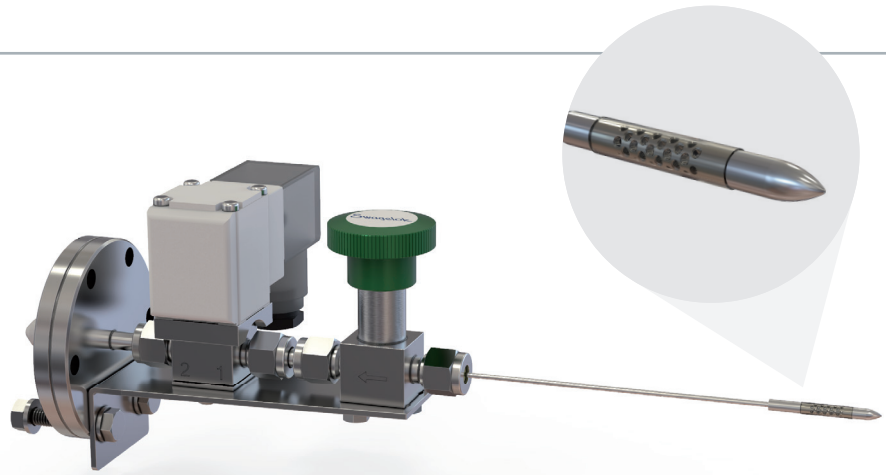

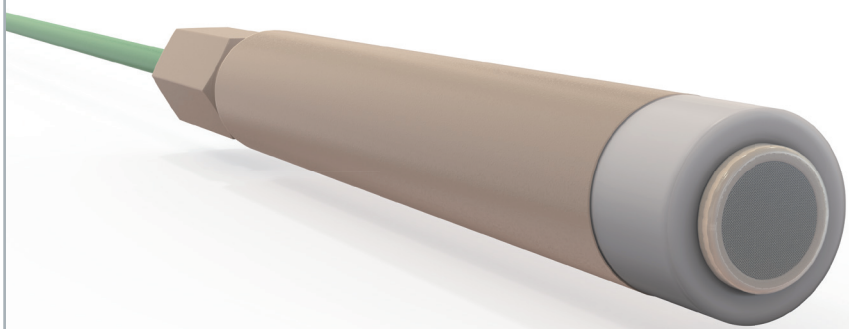

MIMS PROXIMITY PROBE

- Enables ultra-low volume and thin-layer sampling in confined or space-limited setups
- Delivers fast response and high sensitivity for surface-adjacent and interfacial measurements
- Well suited to inline monitoring, reaction kinetics, droplet and biofilm studies

MIMS MULTISTREAM

- Supports multi-point sampling with automatic, sequential measurement
- Optimised for high-throughput vial and batch analysis workflows
- Reduces analysis time while maintaining consistent, repeatable results

Flow Through Series

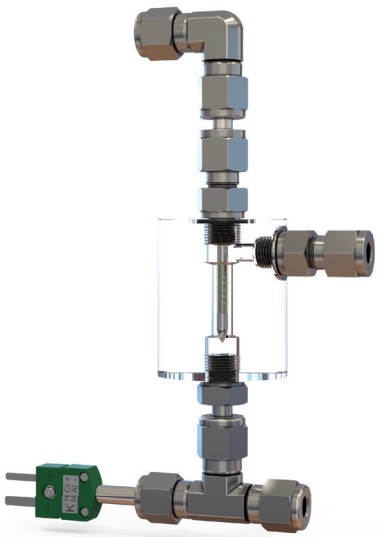

FT-STANDARD

- Flow-through inlet for continuous analysis of environmental water samples
- Designed for stable, routine operation in monitoring applications
- Ideal for ground, sea, and wastewater analysis

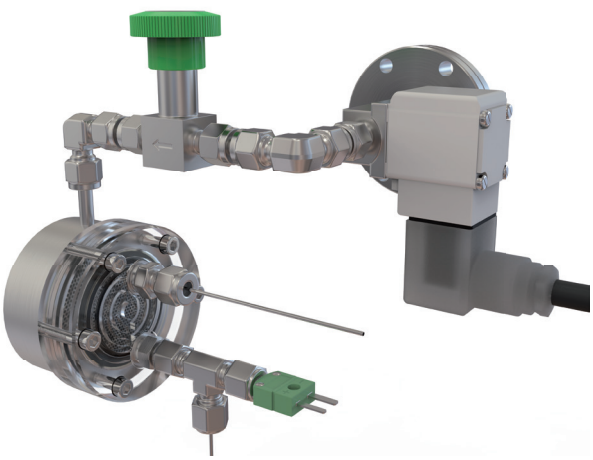

FT-HIGH SENSITIVITY

- Flow-through inlet optimised for enhanced analyte transfer and challenging matrices
- Compatible with alternative membrane types, enabling targeted species analysis
- Suitable for wastewater, slurry, solvent, and oil analysis, including silicone-incompatible media

FT-LOW VOLUME

- Designed for low sample volumes requiring high sensitivity analysis
- Minimises dead volume to improve temporal resolution
- Well suited to vial analysis, denitrification studies, and dynamic environmental measurements

Versatile Accessories for use with the HPR-40 DEMS

For real-time analysis of gases and volatile species in electrochemical research

ECL-STATIC

- Easy setup, versatile design
- Use as static or flow cell with extra ports
- Customisable working surface with vitreous carbon electrode

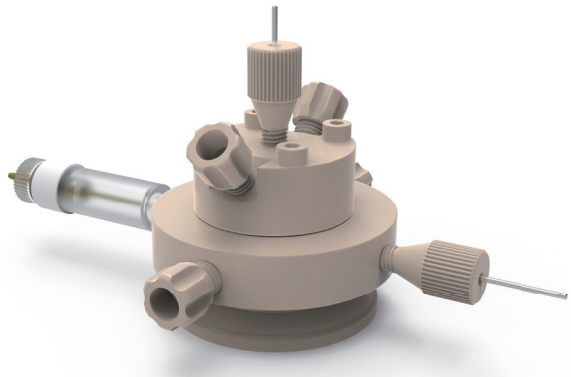

ECL-INSIGHT

- Near-instantaneous response - rapid, quantitative detection
- Rapid scans - voltage sweeps up to 100 mV/s
- Sensitivity to ~50 μA/cm^2 (H_2 evolution)
- Efficient product capture at interface
- High current up to 100 mA/cm^2 without bubble issues

ECL-PROBE

- Real-time dissolved gas analysis in any cell
- Non-metallic, fully immersible design
- Enhances selectivity - hydrophobic support
- Ready-to-connect with the HPR-40 DEMS

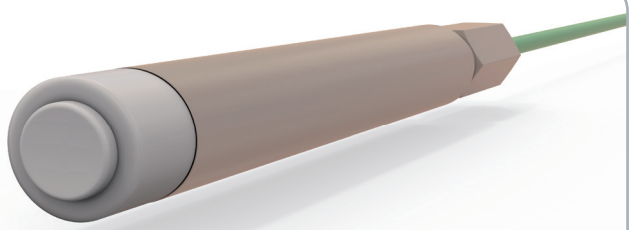

Hiden systems are supplied with at least one sampling inlet, systems are user upgradeable and can accommodate a wide range of inlet systems. To confirm compatibility for specific inlet systems for operation with your system please contact Hiden Analytical or your local representative.

Sales Offices:

We have sales offices situated around the globe. **Visit our website for further information.**

HIDEN ANALYTICAL

Hiden Analytical Ltd.
420 Europa Boulevard
Warrington WA5 7UN England

T **+44 [0] 1925 445 225**
E **info@hiden.co.uk**
W **www.HidenAnalytical.com**