www.hidenanalytical.com
info@hiden.co.uk

HIDEN ANALYTICAL

Quadrupole Mass Spectrometry Concepts

Mass Spectrometers for Residual Gas Analysis

Residual Gas Analysis

What does Residual Gas Analysis allow us to do?

- RGA is the examination of the molecular components present in a vessel or evolved from a system.
  It allows us to analyse, ON-LINE
  and in REAL time:

- Base Pressure Fingerprint
- Leak Detection
- Virtual Leaks / desorption
- Outgassing / Bakeout Cycles
- Pump Performance
- Chamber contaminants

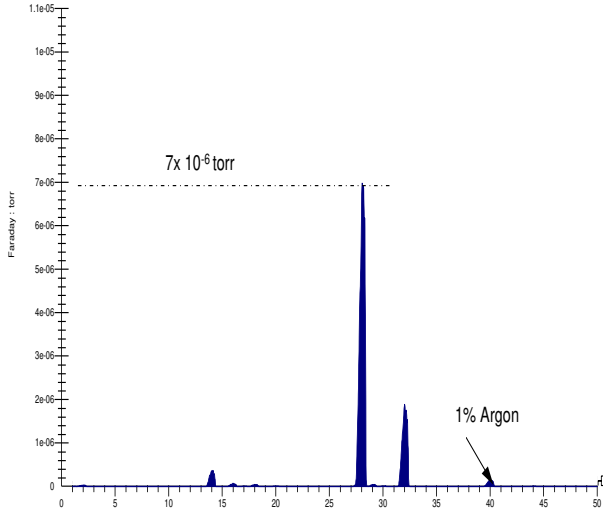

- Characterise your system and process for optimum results

Residual Gas Analysis

Typical contaminant species present may be readily identified:

- Air leak: m/e 28 / 32 (ca. 4.5:1 ratio) confirm by the presence of peaks at m/e 14, 16
- Water: m/e 18 confirm by m/e 17

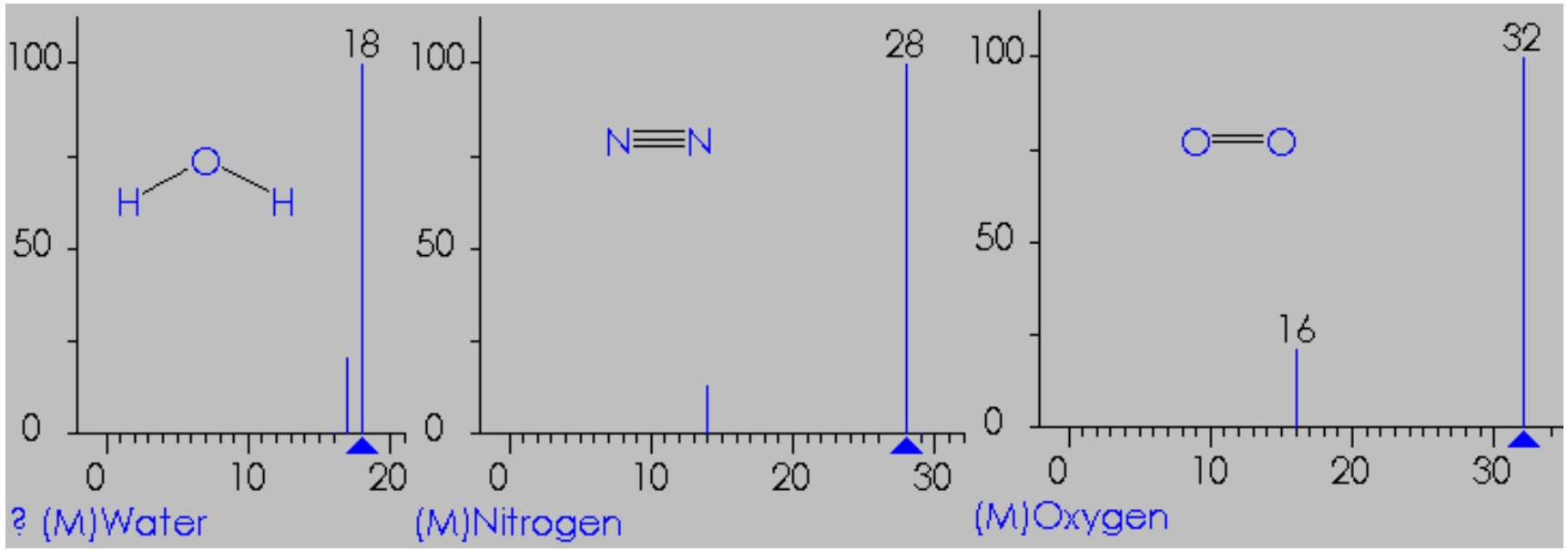

Residual Gas Analysis

Typical contaminant species present may be readily identified:

- Hydrocarbons: characteristic groups of peaks,
  typical peaks at m/e 57, 55, 45, 43

High mass peaks - back-streaming of oil or Vacuum Grease

Low mass peaks - Cleaning fluid / solvent residue

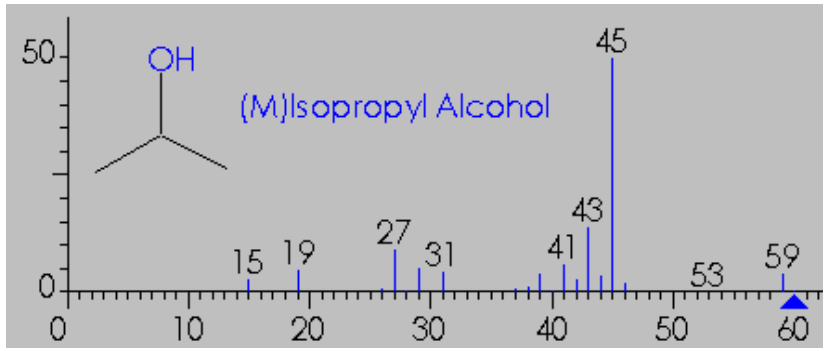

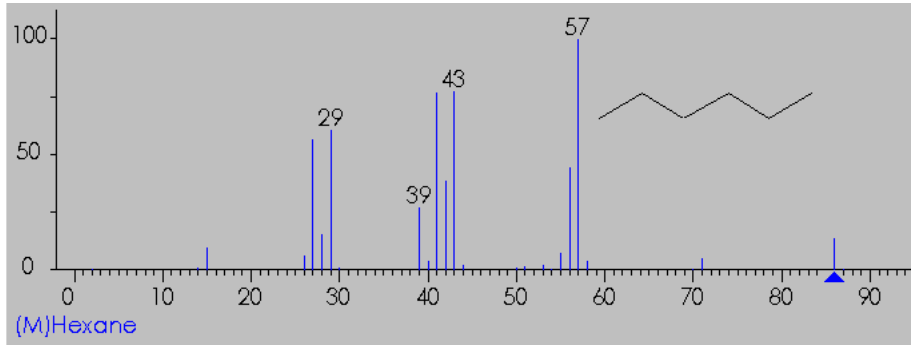

Residual Gas Analysis : How it works

IONISATION – Electron Impact Ionisation (EI)

- Operation depends on the conversion of gas molecules into charged particles, typically positive ions / fragments.
- Achieved by electron impact ionisation via thermionic emission from a hot filament.
- A typical current is 1×10^{-4} Amps.
- Ions extracted into the mass filter.

- *Note:* Ionisation depends on the nature of the species involved.
- If a species is readily ionised it produces a higher MS signal than one which is poorly ionised.
- Use N_2 as a standard, RELATIVE SENSIVITY = 1
- *c.f.* Benzene = 5.9 and Helium = 0.14.

Residual Gas Analysis: How it works

IONISATION – Electron Impact Ionisation (EI)

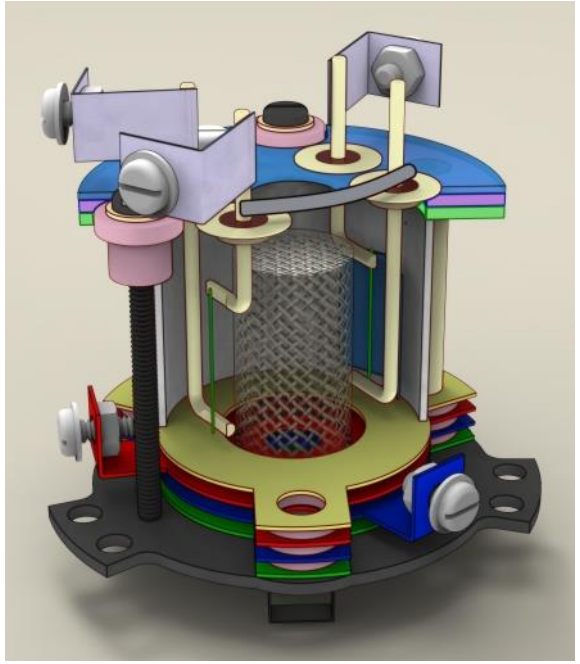

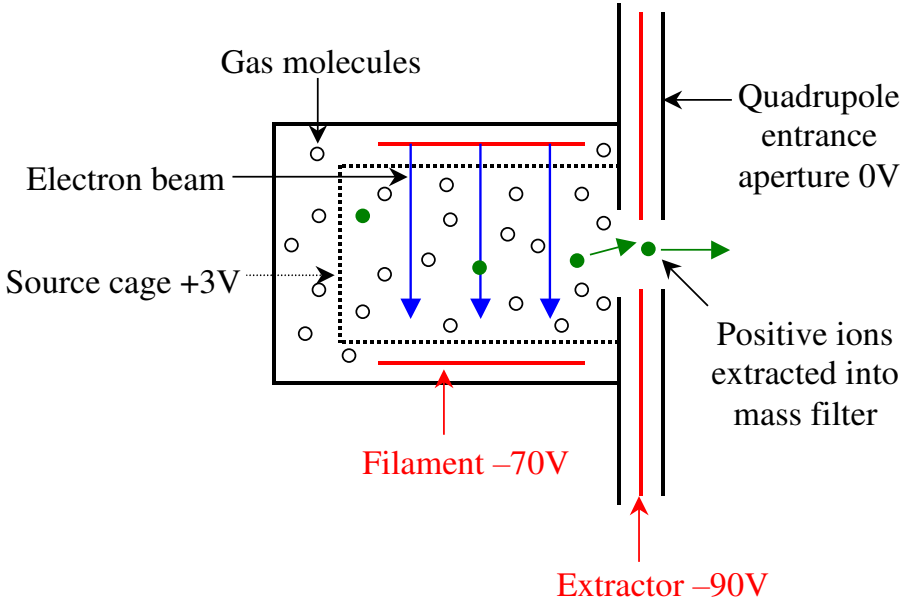

Residual Gas Analysis

How it works : IONISATION

The choice of filament material is important:

Material	Operating Temperature	Comments
Yttria coated Iridium	1900K	Good general purpose, robust. Hiden standard.
Tungsten	2400K	Too hot for RGA use. Reacts with oxygen to give CO, CO2. Hiden uses for certain applications.
Rhenium	2300K	Too hot for RGA use. Reacts to form insulator coating. Hiden do not use.
Lanthanum hexaboride	1300K	Too brittle for RGA use. Hiden do not use.

Lower operating temperature = lower outgassing

Residual Gas Analysis

How it works : IONISATION

It is also important to note that EI yields several types of ions:

Ion	Description
Molecular	The molecule with a positive charge by loss of an electron
Base	The most abundant ion in the spectrum
Fragment	Formed by cleavage of one or more bonds in the molecule
Rearrangement	Formed by bond cleavage and atomic migration
Doubly Charged	2+ Ions from 2 electron loss steps appearing at 1/2 mass i.e. m/2
Metastable	Fragmentation of ion into an ion of lower mass + a neutral particle

See cracking pattern section for further details.

Note: Fragment ions are also known as Product or Daughter Ions

Residual Gas Analysis

How it works : THE MASS FILTER

- The mass filter differentiates the ions produced and selects species for detection.
- The most common form of mass filter is the Quadrupole.
- A Quadrupole is 2 pairs of parallel, equidistant metal rods (poles) biased at equal, but opposite potentials

- These twin potentials contain fixed DC and alternating RF components. By varying the RF component the resultant field produced by the rods may be varied.

Residual Gas Analysis

How it works: THE MASS FILTER

- Any ions entering the quadrupole field experience potential differences deflecting them from their original trajectory.
- The extent of deflection of any ion entering the field is related to its mass : charge (m/e or m/z) ratio.
- At each interval on the RF scan only one m/e ratio resonates with the field allowing the ion to pass along the z-axis.
- All other species are deflected and neutralised by impact upon the rods of the quadrupole.

Residual Gas Analysis

How it works : THE MASS FILTER

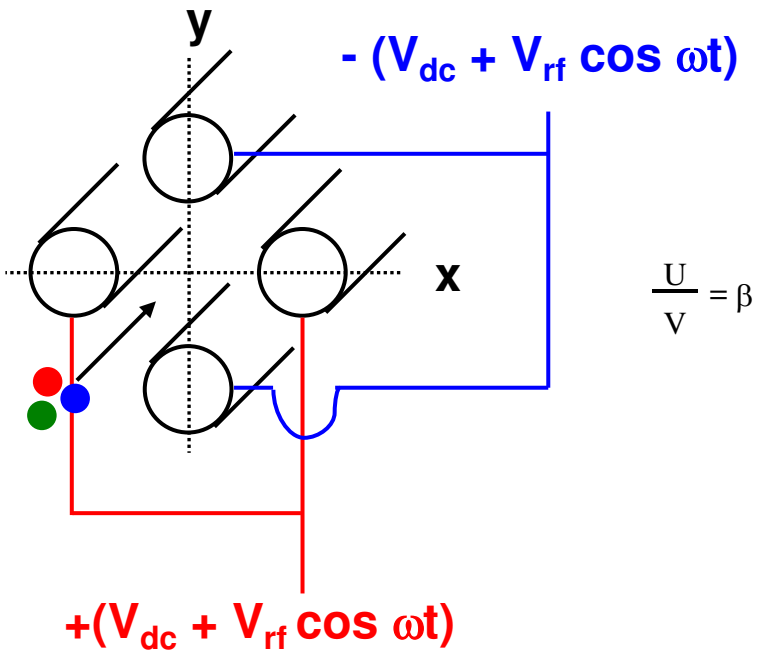

$$\frac{U}{V} = \beta$$

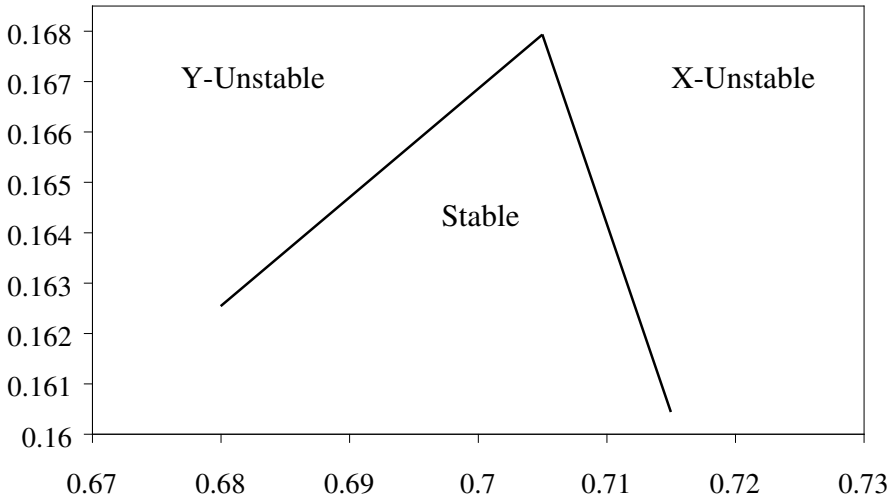

$$\frac{4qV}{\omega^2 m r_0^2} = 2\alpha$$

Residual Gas Analysis

How it works : THE MASS FILTER -Mathieu Stability Diagrams

XZ

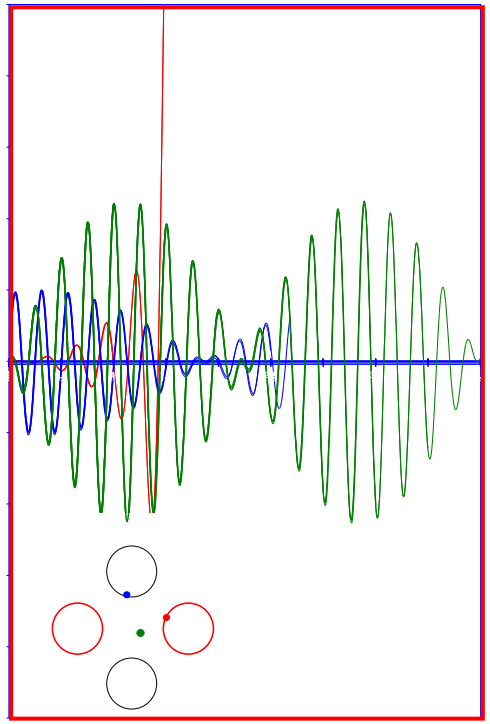

YZ

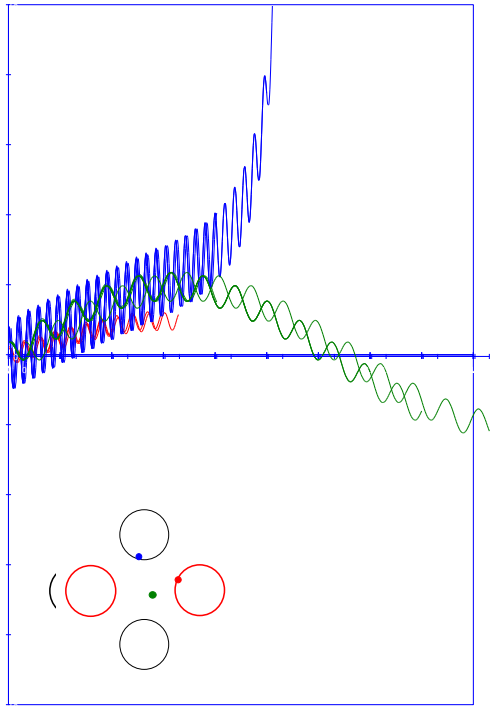

Residual Gas Analysis

How it works : THE DETECTOR

- Filtered ions strike the detector to result in an ion current which is measured by a sensitive amplifier.

Two main types of Detector:

- **a) The Faraday Cup** – an earthed passive conducting surface with a suppressor electrode to avoid false measurement.
- Fast moving ions strike the cup cause a 'shower' of 'secondary' electrons. The use of the 'cup' rather than a plate, allows all electrons to be collected.
- Hence, one ion arriving at the Faraday needs one electron for neutralisation but causes several electrons to be emitted; this provides amplification – several electrons for each ion.

Residual Gas Analysis

How it works : THE DETECTOR

- The Faraday Cup: Detection limits
- Ion current for N_2 is 10^{-4} amps / mbar
- At 10^{-8} mbar of N_2,
  $10^{-8} * 10^{-4} = 10^{-12}$ amps
- At 10^{-11} mbar of N_2 = 10^{-15} amps

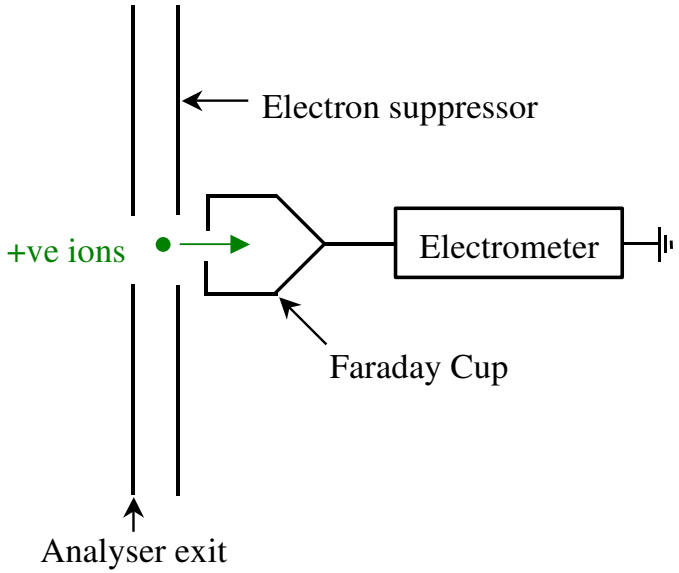

⇒ Detection limit for conventional analogue amplifier

Residual Gas Analysis

How it works : THE DETECTOR

- **b) Secondary Electron Multiplier** / Single Channel Electron Multiplier (SEM / SCEM):
  A surface designed to generate secondary electrons.
- The ion impacts the surface generating 2 or 3 electrons each of which undergo further surface collisions generating more electrons, and so on in a cascade effect.
- Power for this cascade provided by an applied voltage.
- Gain is typically 10^3 (10^2 for a channel plate)

Minimum detectable pressure

10^{-14} mbar to 10^{-13} mbar

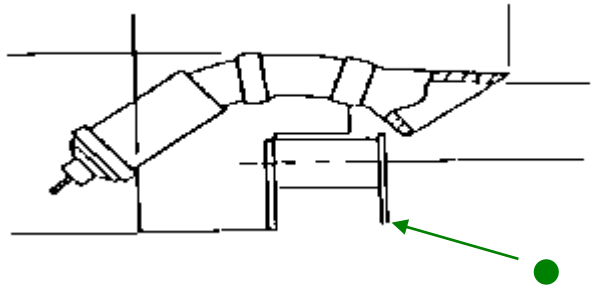

Residual Gas Analysis

Detector Pros and Cons:

Faraday Cup :

- Lower cost
- Indestructible
- Accurate

BUT :

- Detection limit 10^{-11} mbar
- Measurement relatively slow near detection limit

Residual Gas Analysis

SEM / SCEM :

- Detection limit 10^{-14} - 10^{-13} mbar with analogue detection
- Faster measurement

BUT :

- Expensive/Expendable/Sensitivity species dependent
- Sensitivity time / application dependent
- Typical maximum pressure of 10^{-5} - 10^{-6} mbar

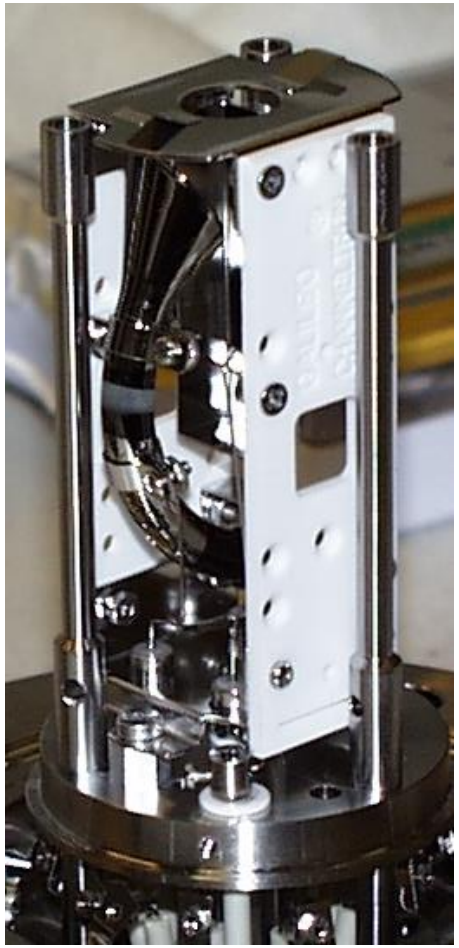

Residual Gas Analysis

Resolution :

- The ability to separate /resolve ions of different m/e ratios
- All definitions directly / indirectly relate peak width to height
- *For example:*

  $M / \Delta M$

- M at 10% peak height where $\Delta M < 1$ a.m.u.
- *i.e.* For any given mass M, the peak width at 10% of the peak height, measured from the baseline, is less than 1 amu

- This may be complicated if the mass peaks of trace species occur in the peak tail of a major species e.g. the detection of m/e 27 or m/e 29 in the presence of N_2 at m/e 28.

Residual Gas Analysis

Interpretation and Cracking Patterns:

- RGA data can be presented as a profile of mass / charge peaks. e.g. the RGA of Air :

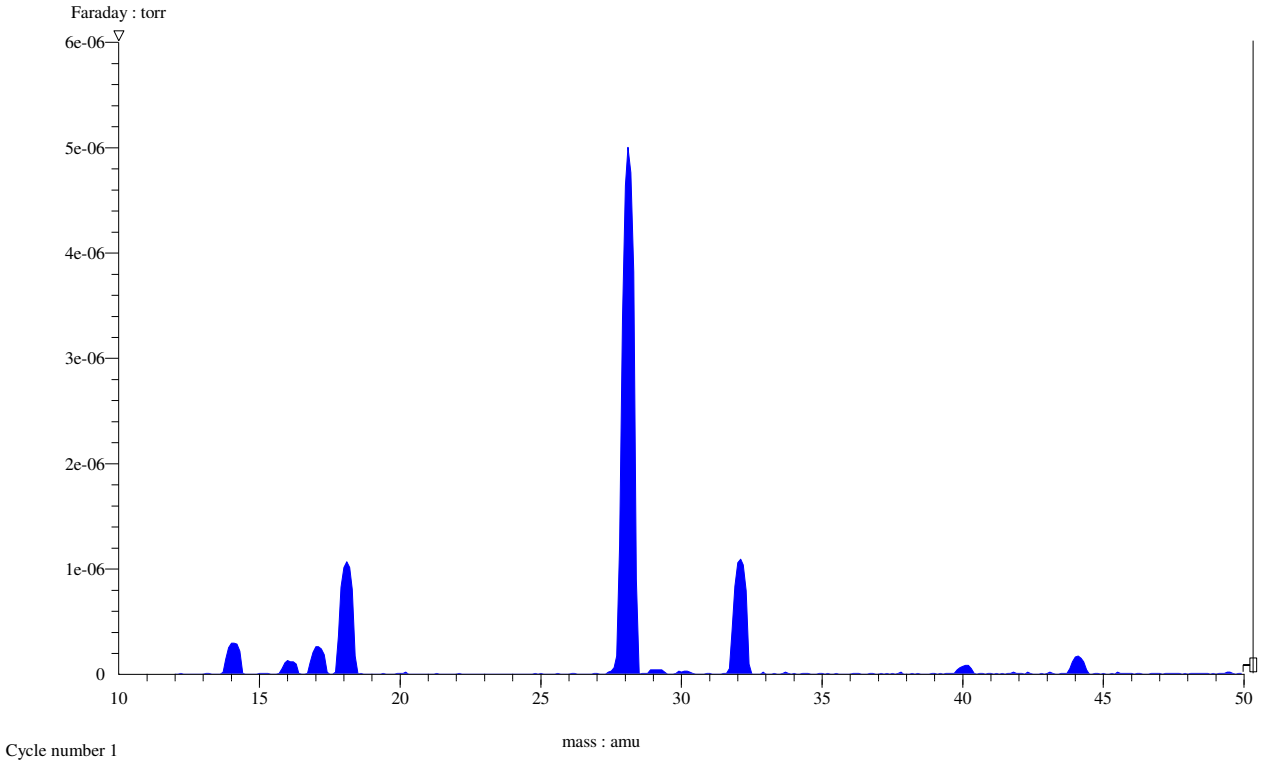

Residual Gas Analysis

Cracking Patterns:

- Cracking arises during ionisation when the high energy electrons used not only ionise species but fragment them. For CO:

$^{12}C^{16}O + e^- \rightarrow \mathbf{(^{12}C^{16}O)^+}$ **Ionisation** to give a peak at m/e = 28

$^{12}C^{16}O + e^- \rightarrow {}^{12}C + \mathbf{^{16}O^+}$ **Cracking** to give a peak at m/e =16

$^{12}C^{16}O + e^- \rightarrow \mathbf{^{12}C^+} + {}^{16}O$ **Cracking** to give a peak at m/e = 12

This fragmentation can be used to differentiate isobaric species:

$^{12}C^{16}O$ from $^{14}N_2$ for example.

$^{14}N_2$ has peaks at m/e 28 ($^{14}N_2^+$) and m/e 14 ($^{14}N^+$) from:

$^{14}N_2 + e^- \rightarrow \mathbf{(^{14}N_2)^+}$ **Ionisation** to give a peak at m/e = 28

$^{14}N_2 + e^- \rightarrow {}^{14}N + \mathbf{^{14}N^+}$ **Cracking** to give a peak at m/e = 14

$(^{14}N_2)^+ + e^- \rightarrow \mathbf{(^{14}N_2)^{++}}$ **Ionisation** to give a peak at m/e = 14

Note: CO/N_2 are ISOBARIC $\Rightarrow$ the same mass but different composition

Residual Gas Analysis

Interpretation and Cracking Patterns:

- Using Cracking Patterns it is possible to identify all species
- NOTE: The cracking pattern is directly related to the energy of the electrons used i.e. Under normal conditions the Cracking Pattern is characteristic of a species

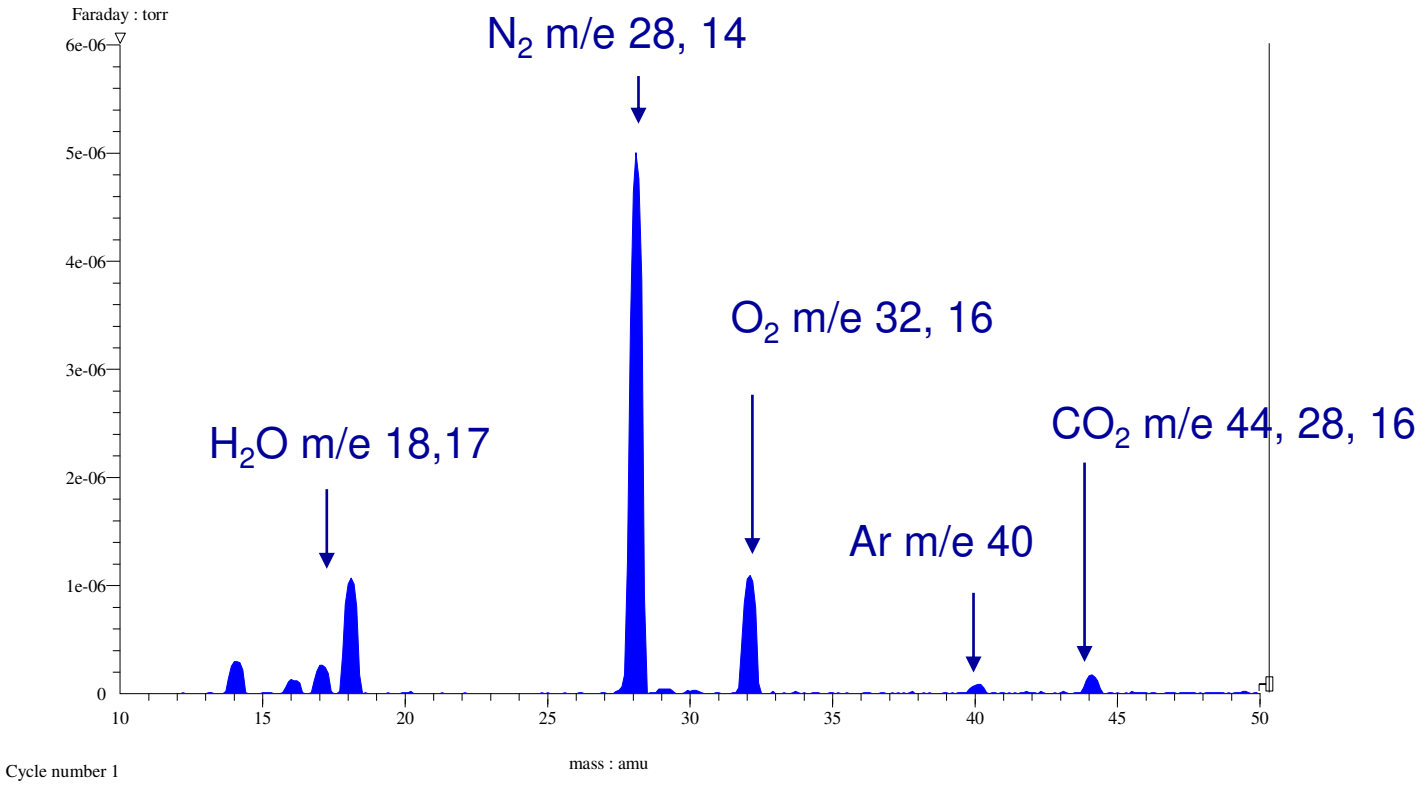

Residual Gas Analysis

Interpretation and Cracking Patterns:

- Cracking pattern example – Linear Hydrocarbons
- Decane ($C_{10}H_{22}$) and Butane (C_4H_{10}) show similarities – why?

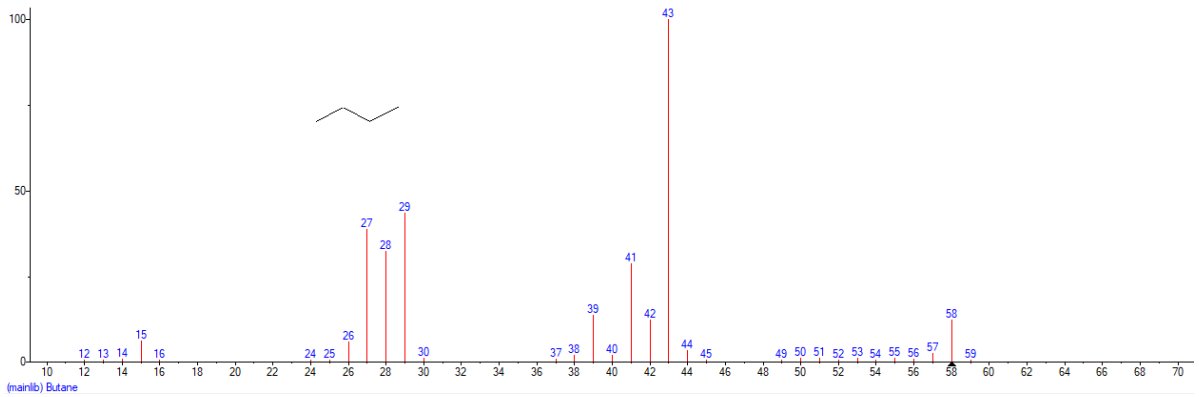

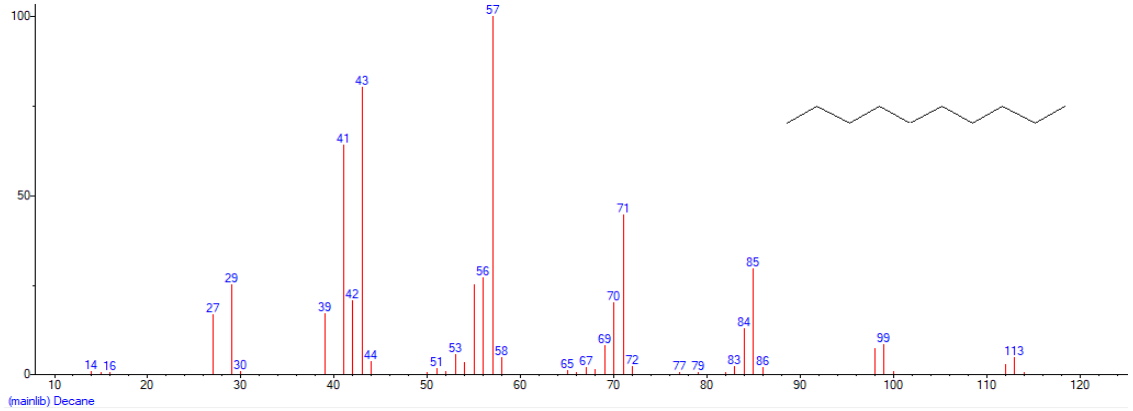

Both compounds show Clusters of Peaks at:

m/z 57
m/z 43
m/z 29

⇒ Loss of unit of mass 14

Residual Gas Analysis

Interpretation and Cracking Patterns:

Cracking pattern example
The mass 14 unit ⇒ loss of alkyl-type species CH_2 i.e.

$$C_{10}H_{22} + e^- \rightarrow C_{10}H_{21}^+ + e^- \rightarrow CH_3^+, C_2H_5^+, C_3H_7^+, C_4H_9^+, C_5H_{11}^+ \text{ etc.}$$

And

$$C_4H_{10} + e^- \rightarrow C_4H_9^+ + e^- \rightarrow CH_3^+, C_2H_5^+, C_3H_7^+$$

⇒ FRAGMENTATION – Bond cleavage AND Ionisation.

Residual Gas Analysis

Interpretation:

- Isotopic Abundance.
- Many species exist as several naturally occurring isotopes:

Atom	Isotopes and relative abundances
Carbon	^{12}C – 100, ^{13}C– 1.1
Nitrogen	^{14}N – 100, ^{15}N – 0.4
Oxygen	^{16}O - 100, ^{18}O – 0.2
Fluorine	Monoisotopic
Chlorine	^{35}Cl – 100, ^{37}Cl – 32.5
Bromine	^{79}Br – 100, ^{81}Br - 98
Iodine	Monoisotopic
Phosphorous	Monoisotopic
Sulfur	^{32}S – 100, ^{34}S – 4.4
Silicon	^{28}Si – 100, ^{29}Si – 5.1, ^{30}Si – 3.4

Residual Gas Analysis

Interpretation :

- Isotopic Abundance *e.g.*: Sulphur isotopes in the MS of SF_6

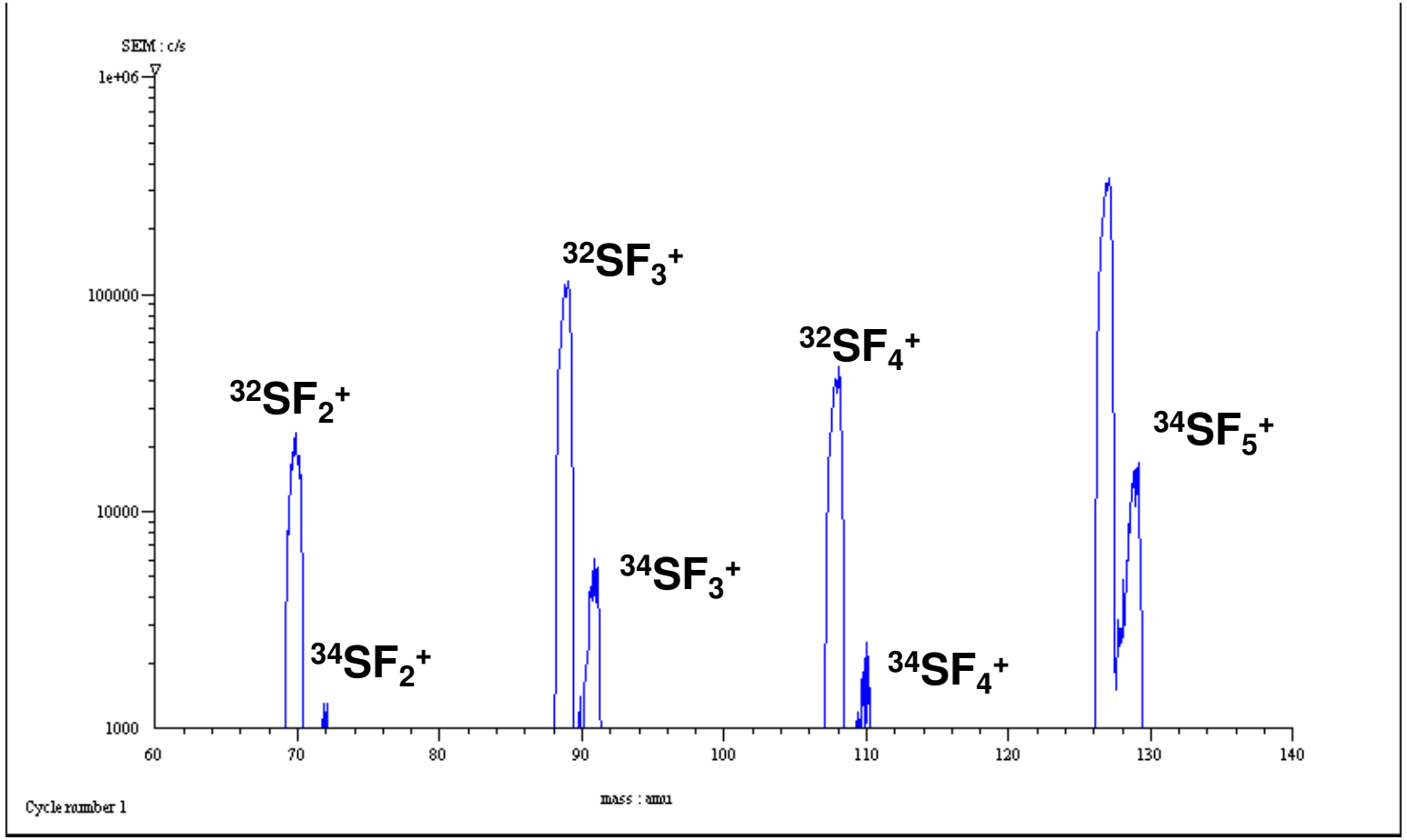

Residual Gas Analysis

Interpretation:

- General steps in interpretation of a Mass Spectrum.

1. Look for the Molecular Ion(s)
2. Note the general appearance of the spectrum
3. Check spectrum for peak clusters for Isotope patterns
4. Check for low-mass neutral fragment loss e.g. CH_2
5. Check for characteristic low-mass fragments
6. Compare to reference spectra

Quadrupole Mass Spectrometers

Hiden manufactures a wide range of MS systems, all tailored to specific customer applications.

Options include:

- Mass Ranges of 50, 100, 200, 300, 510, 1000 and 2500 amu
- Ioniser options including cross-beam, gold plated and platinum
- Detectors: Faraday and electron multipliers, Channelplate, Channeltron, analogue current measurement and digital pulse ion counting options
- 6 mm, 9 mm or 20 mm pole diameter
- Single and triple filter options
- Ethernet, USB, and serial comms.

Hiden Gas Analysers

- Rugged modular construction with precision machined radial ceramic rod supports
- Powerful processor with data buffering for true multi-tasking operation
- Ion blast free for maximum sensitivity in He leak detection
- Detection to 5 x 10^{-14} Torr / PPB levels
- Bench, cart or console mounted
- Fully automated operation
- Application specific gas inlets
- Corrosive gas / oil free pumping
- Multi-stream options
- Quantitative gas analysis

Appendix 1

- Table 1a gives some of the common RGA contaminants

Name	Formula	Peak 1 m/e	Peak 1 %	Peak 2 m/e	Peak 2 %	Peak 3 m/e	Peak 3 %	rel sens
Acetone	C_3H_6O	43	100	58	33	15	20	3.6
Air		28	100	32	27	14	6	1.0
Ammonia	NH_3	17	100	16	80	15	8	1.3
Argon	Ar	40	100	20	16	36	0.3	1.2
Benzene	C_6H_6	78	100	77	19	52	16	5.9
Boron Trichloride	BCl_3	81	100	58	33	15	20	1.0
Carbon Dioxide	CO_2	44	100	16	9	14	6	1.4
Carbon Monoxide	CO	28	100	12	5	16	2	1.05
Carbon Tetrafluoride	CCl_4	69	100	50	12	19	7	1.0
Diborane	B_2H_6	26	100	27	97	24	90	1.0
Ethane	C_2H_6	28	100	27	33	30	26	2.6
Fomblin Oil		69	100	20	28	16	16	1.0
Freon 12	CCl_2F_2	85	100	87	32	50	16	2.7
Helium	He	4	100					0.14
Hydrogen	H_2	2	100	1	2			0.44

Appendix 2

- Table 1b gives more common RGA contaminants

Name	Formula	Peak 1 m/e	Peak 1 %	Peak 2 m/e	Peak 2 %	Peak 3 m/e	Peak 3 %	rel sens
Hydrogen Chloride	HCl	36	100	38	32	35	17	1.6
Hydrogen Sulfide	H_2S	34	100	32	44	33	42	2.2
Krypton	Kr	84	100	86	31	82	21	1.7
Methane	CH_4	16	100	15	85	14	16	1.6
Methanol	CH_3OH	31	100	32	67	29	65	1.8
Neon	Ne	20	100	22	10	21	0.3	0.23
Nitrogen	N_2	28	100	14	5	29	1	1.0
Oxygen	O_2	32	100	16	9			0.86
Phosphine	PH_3	34	100	33	33	31	32	2.6
Pump Oil		57	100	55	73	43	73	1.0
Silane	SiH_4	30	100	31	78	29	29	1.0
Silicon Tetrafluoride	SiF_4	85	100	86	5	28	4	1.0
Sulfur Dioxide	SO_2	64	100	48	50	32	10	2.1
Water	H_2O	18	100	17	21	16	2	0.9
Xenon	Xe	132	100	129	98	131	79	3.0

- www.HidenAnalytical.com
- The Hiden website is an excellent resource with product pages, brochures, catalogues, product pages with some application notes, presentation and other information.
- Contact +44 1925 445225 for direct support.