HIDEN ANALYTICAL

Hiden IDP

Quadrupole Mass Spectrometer for low energy ion analysis in electron or photon stimulated ion desorption studies

The IDP mass spectrometer is the same as the EPIC system with the addition of a tuneable 4 lens ion optic lens for low energy ion analysis.

IDP Applications

The Hiden IDP can be used for applications beyond the standard RGA including:

- UHV surface science
- Electron stimulated desorption
- Photon stimulated desorption
- Thermal desorption studies
- Radical analysis
- Molecular beam studies
- Time resolved studies

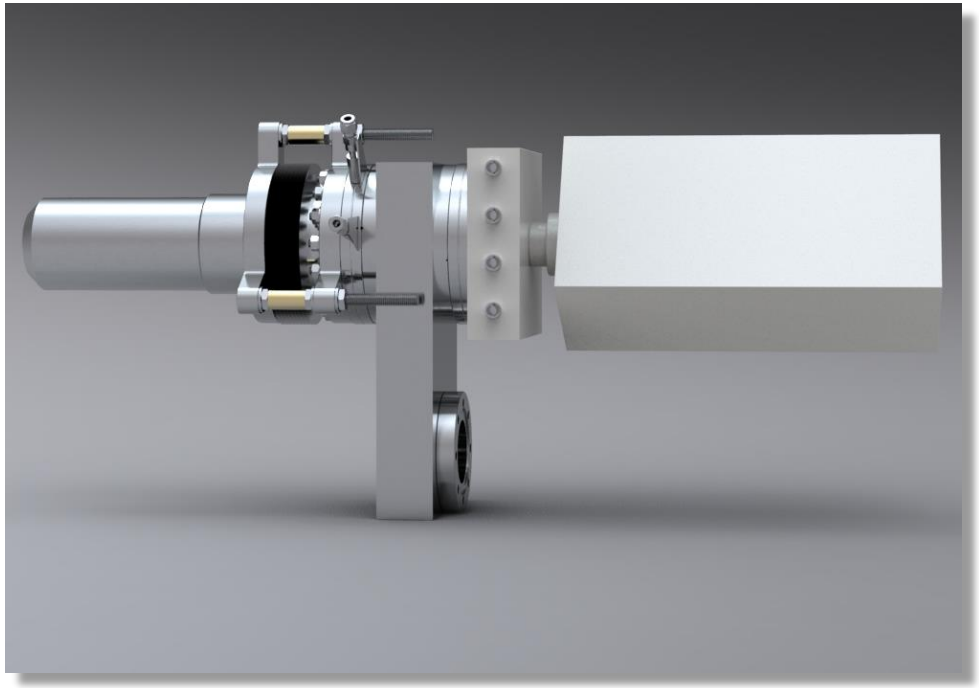

The IDP advantage

- Pole bias mid-axis potential
- Negative ion capability
- Integrated 4 lens element ion optics, optimised for low energy ions
- Suitable for Electron Attachment Mass Spectrometry

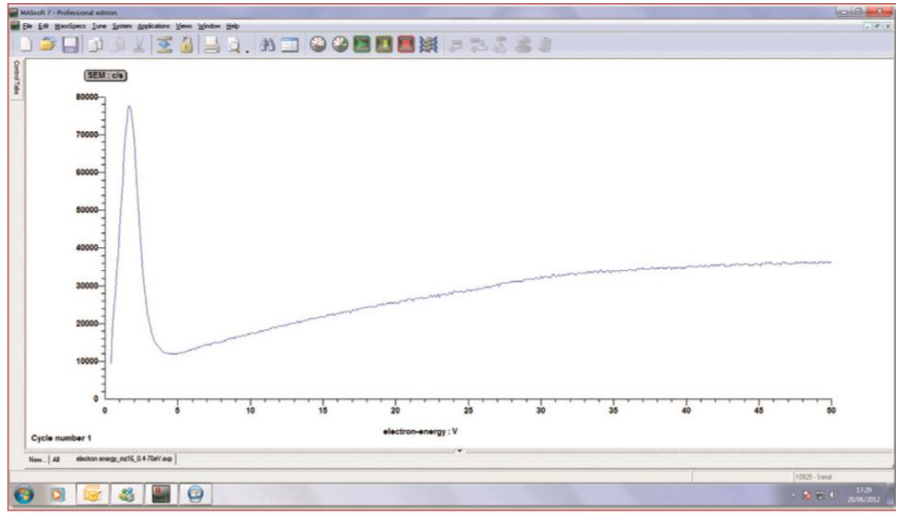

O^- ions formed by dissociative electron attachment
$e + N_2O \rightarrow N_2 + O^-$

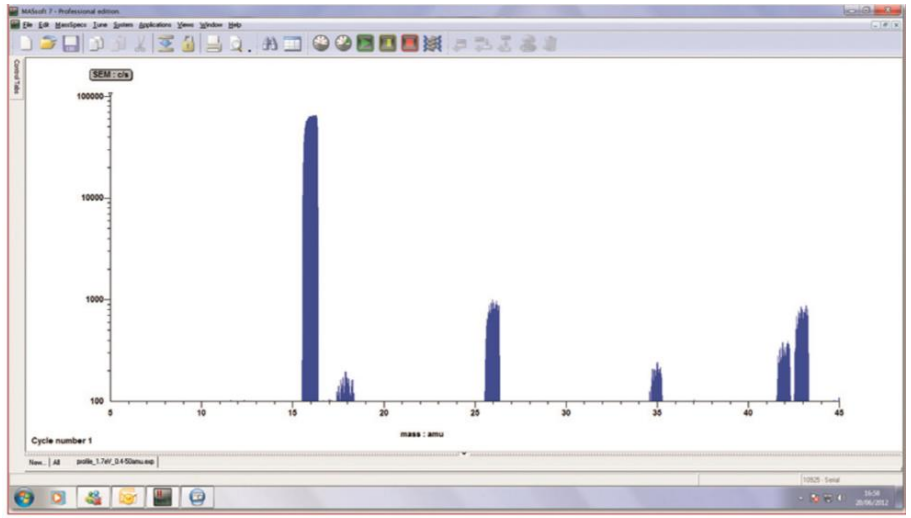

Mass spectrum of negative ions formed by low energy electron attachment

Triple Filter Mass Spectrometer

Why have a triple filter?

Two main advantages:

1. Strict control over the quadrupole entrance and exit fields provides enhanced sensitivity for high mass transmission and increased abundance sensitivity

2. Enhanced long-term stability. The bulk of the deselected ions from the quadrupole ioniser deposit harmlessly on the RF-only pre-filter stage, minimising contamination on the mass selective primary filter.

Available configured with 6mm or 9mm pole diameter.

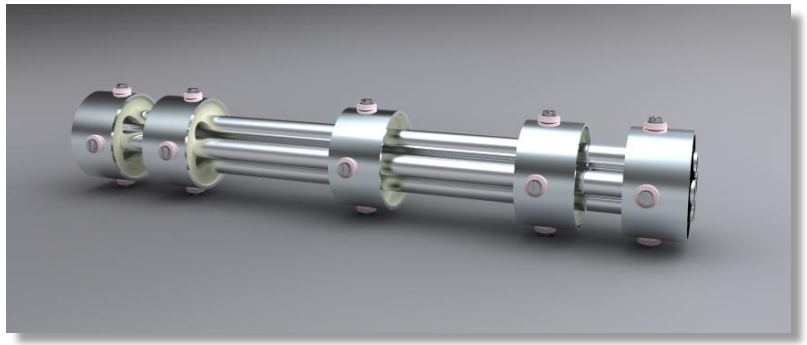

Configuration

- Multiple ion source options
- Configured with 6mm or 9mm

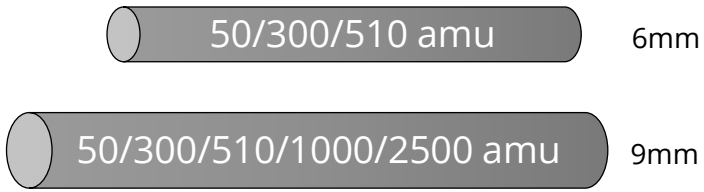

What pole diameter do I need?

- Total RF output power is fixed for a given generator
- Power demand increases dramatically with increasing RF frequency: ($\propto \nu^5$)
- For given mass, performance improves with increasing frequency
- For given tolerances, transmission and mass separation improve with increasing pole diameter
- Overall **size** and **cost** increase with increasing pole diameter
- Enlarging pole diameter increases assembly capacitance and limits RF range (increases power losses)
- It is cost effective to keep the pole size to a minimum

IDP system – 6mm pole diameter

Shown with stainless steel shroud

Mass range options: 50, 300 or 510 AMU

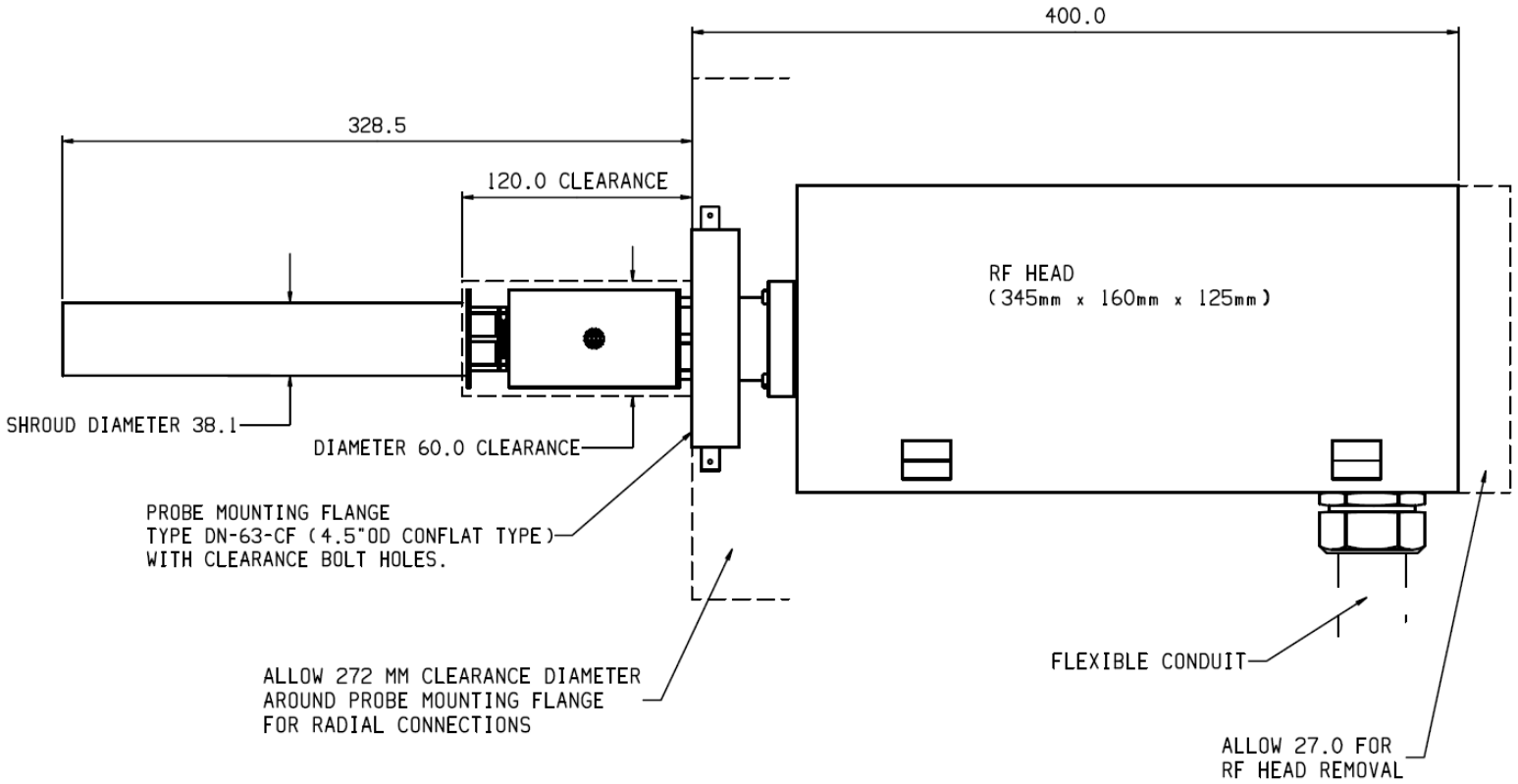

IDP System 9mm pole diameter

with flange adapter for mounting on a DN-63-CF
114mm diameter, 4.5 “ conflat flange.
Mass range options: 50, 300, 510, 1000 or 2500 amu

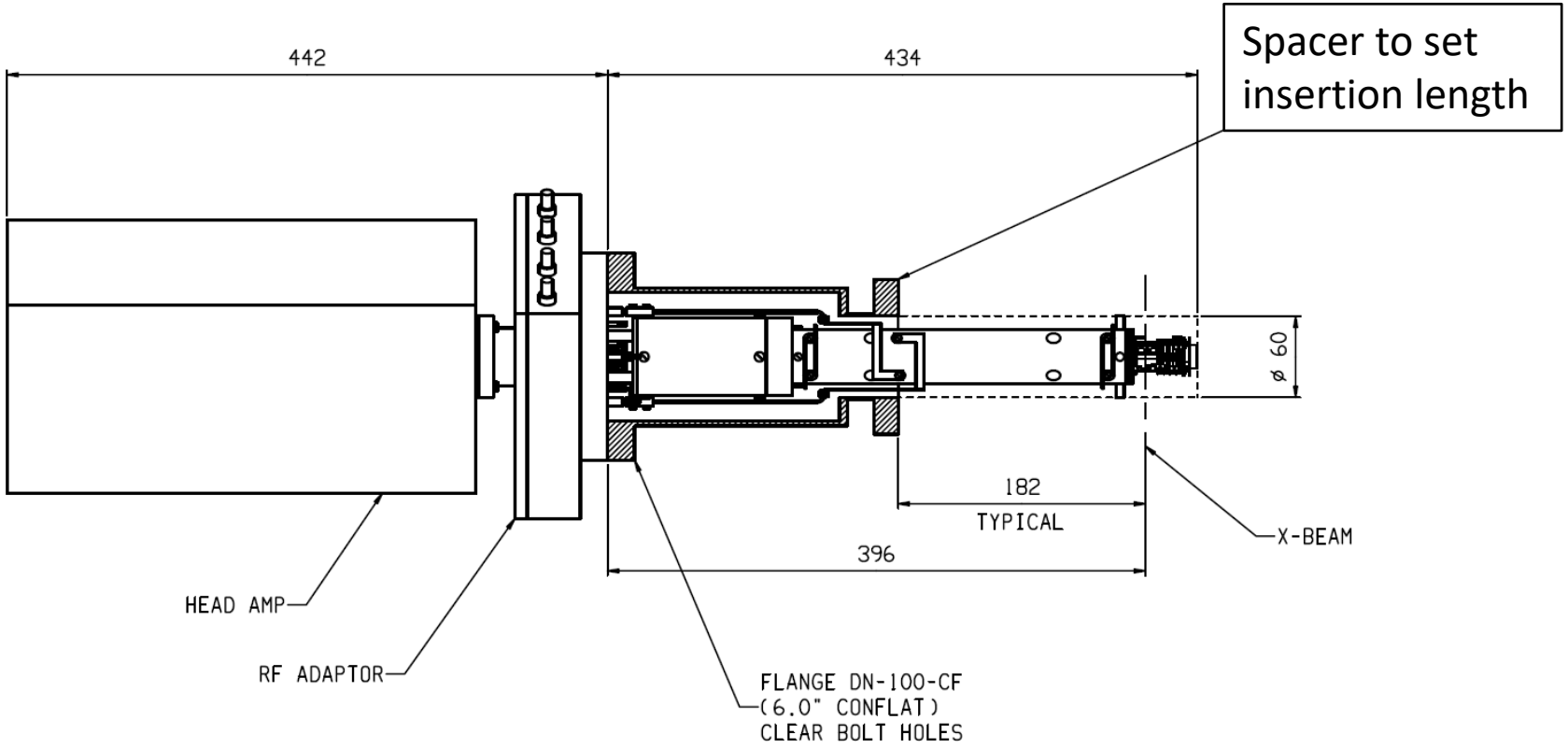

Electron Impact (EI) - Ion Source

UHV Low Profile EI source – Included as standard for EPIC systems.

Twin filaments – Yttria coated iridium.

Ion Source parameters are software settable, controllable and can be scanned over a wide range:

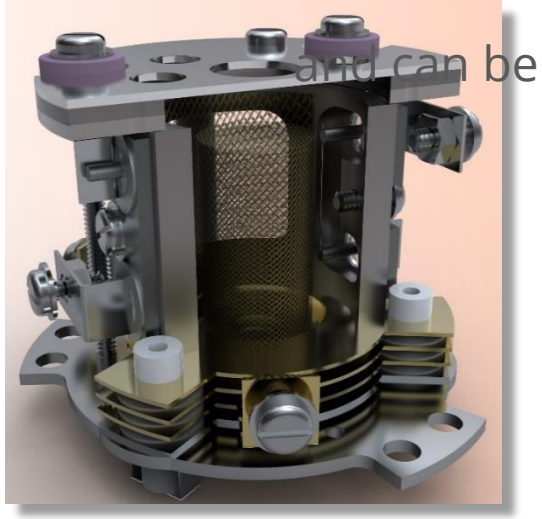

Parameter	
Emission	1 to 2000 µA
Electron Energy	0.1 to 150 eV
Ion Energy	0 to 10 eV
Probe Axis Potential	- 100 to +100 eV
	- 1000 to +1000 eV (Optional)

Optimised for UHV TPD studies enabling closer proximity of the ion source to the evolution surface

IDP 4 Lens Ion Optics with Integral Ioniser

- Additionally enables analysis of low energy positive and negative ions generated externally to the analyser. For electron, photon and laser stimulated desorption studies. Included as standard in Hiden IDP systems

IDP – electrode schematic

Schematic shows
the internal voltage sources
Software settable,
controllable and scanable.

The external reference
connection available with the
high energy option allows
the mid axis potential to be
connected to a user
reference, target bias for
example.

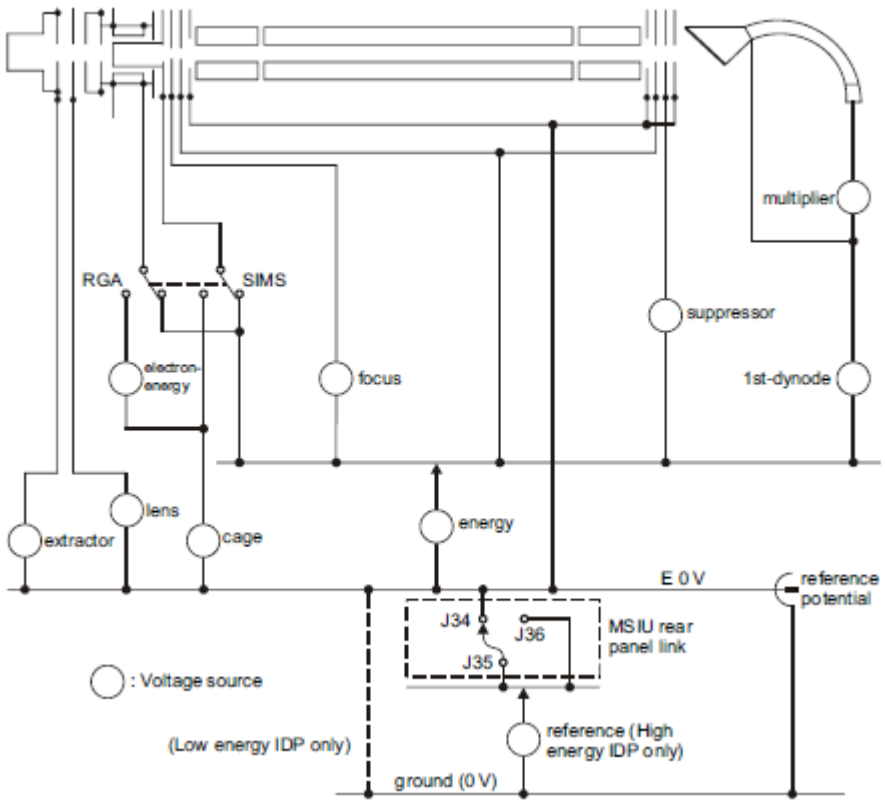

IDP 4 lens ion optics, EI source, quadrupole pole bias ,detector connections
Low energy : +/- 100eV : High Energy Option +/- 1000eV

Ion Source Options

Basic Cross Beam – Used for analysis on molecular beams, where the beam may be liable to condense to condense on ioniser surfaces. The source features an unobstructed pathway through the ionising region of the source. External shrouds are available to protect the quadrupole mass filter from the condensing species

Laser Cross Beam – Includes two orthogonal unobstructed pathways for laser photon ionisation within the source cage region, providing an alternative to electron impact and electron attachment ionisation

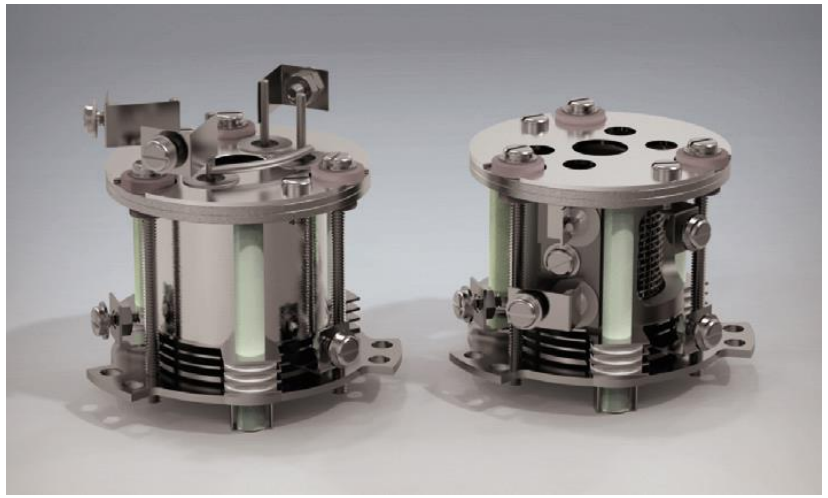

Ion Source Options

Platinum Ion Source – Configured for improved operation in reactive glasses. Radially symmetric, UHV compatible.

Gold Plated Ion Source – Configured to minimise the effects of source outgassing. Radially symmetric, UHV compatible. Available as standard or low profile options.

UHV compatible mass filter shrouds

Range of Shrouds

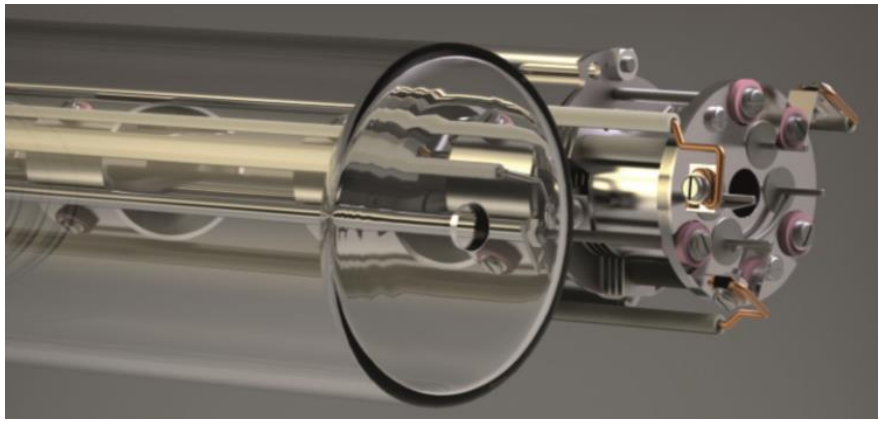

EPIC 300 and quartz shroud

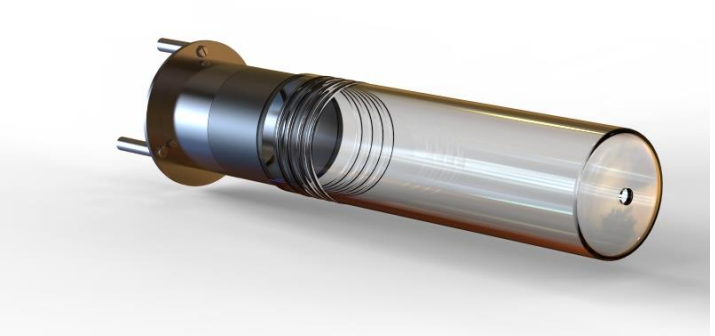

Quartz shroud for UHV-TPD

IDP – Detector

Secondary Electron Multiplier SEM detector for positive and negative ions

- Secondary Electron Multiplier detector for positive and negative ions
- Fast pulse ion counting detector with continuous 7 decade measurement from 1 cs^{-1} to 10^7 cs^{-1}
- Analog detection mode with Faraday cup detector option extends dynamic range to > 10 decades
- Minimum detectable partial pressure: $5x10^{-15}$ mbar 1 cs^{-1} ~ $1.3x10^{-16}$ mbar

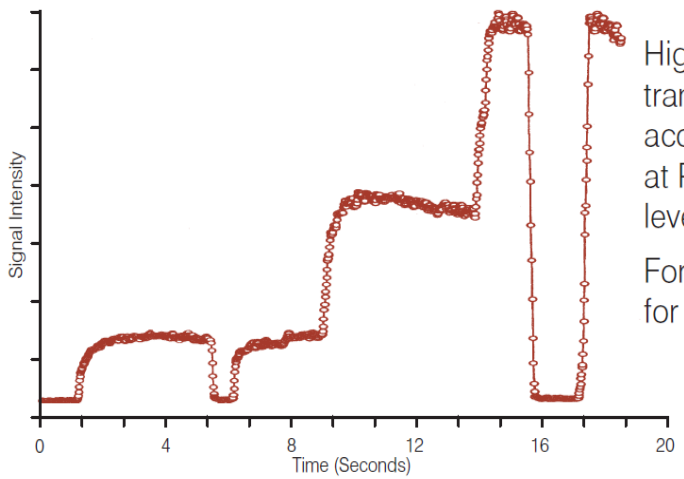

High quality transient data acquisition at PPM/PPB levels.

For UHV/TPD for example.

Pulse ion counting detection provides for fast data acquisition over a wide dynamic range.
Ideal for fast event studies at UHV.
UHV-TPD for example.

Programmable Signal Gating

- Signal gating input with 0.1 µs resolution is standard.
- Enhanced signal gating modes including programmable signal gating and MCS are available as system options or upgrades.
- Programmable signal gating includes foreground and background delay timers to monitor two time zones with respect to a relative repeated event.
- Typical data acquisition time ~30 minutes.

Features:

- 0.1 µs minimum gate delay and width.
- Automatic background subtraction for modulated molecular beam studies.
- Ion flight time measurements.

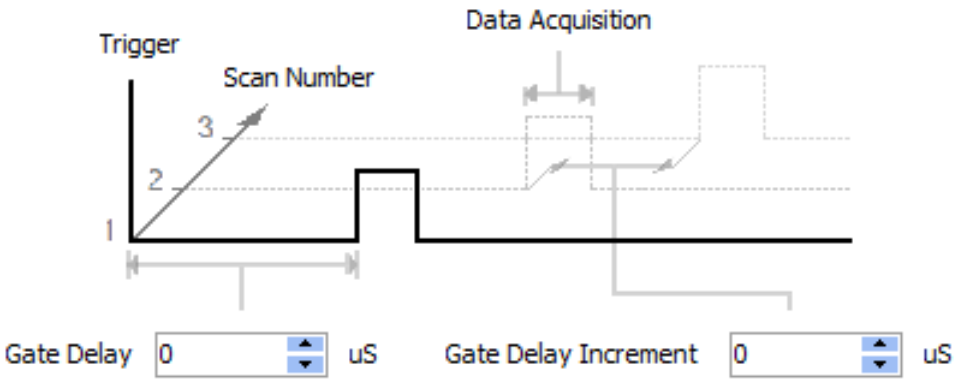

Multi-Channel Scalar (MCS) Device

- Optional innovative Multi-Channel Scalar (MCS) device integrated into controller firmware and MASsoft Professional software.
- 6000-bin multichannel scalar resolution offering 50 ns time resolution.
- Data is intuitive to obtain and can be manipulated in external programmes such as Excel and Origin.
- Typical data acquisition time ~5 minutes.

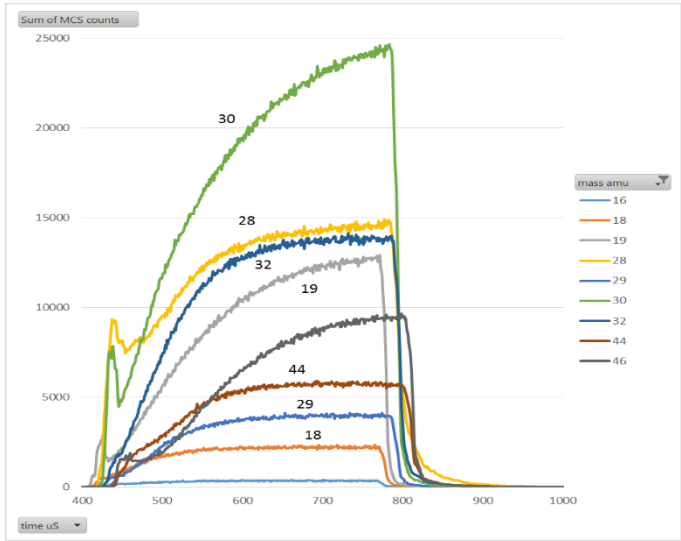

Suitable for transient event analysis applications such as:

- Beam chopper inlets.
- Ion flight time measurements.
- Laser stimulated desorption.

IDP – Example Data 1 : histogram mode

Data from: Silicon Surface IDP 300 mass spectrometer - 300 AMU mass range

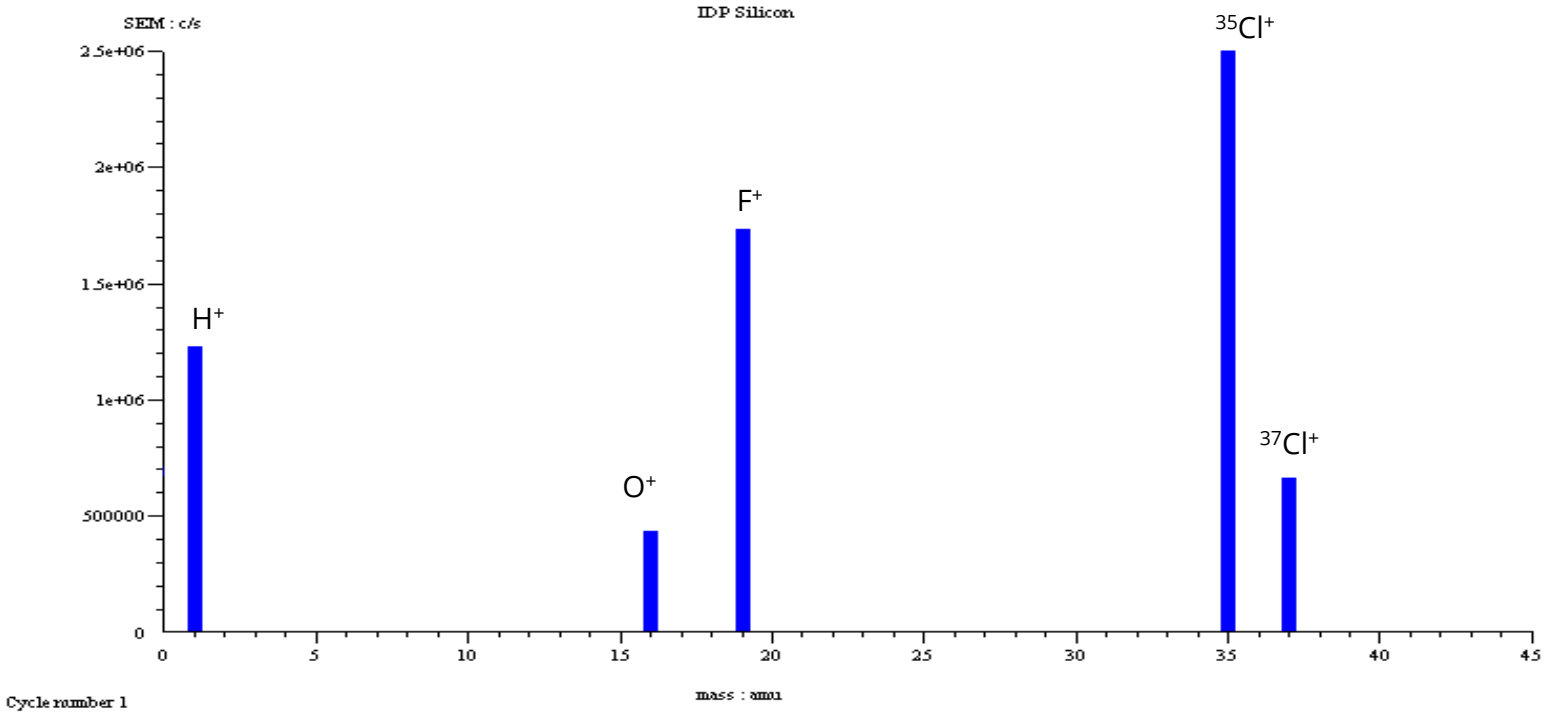

A histogram display of surface ions present on the surface. The intensity scale in counts per second and the mass range spanned are user adjusted to suit the specification application. The example shown illustrates the presence of mainly halogenic contamination on a silicon surface obtained prior to surface cleaning.

IDP – Example Data 2 : trend analysis

Data from: IDP 300 mass spectrometer - 300 AMU mass range

The example shows a graphical trend analysis scan from a silicon surface with adsorbed water multi-layers which thermally desorb upon heating at t = 16 minutes. This results in the re-establishment of the H^+ and F^+ signals to the same intensity observed at room temperature.

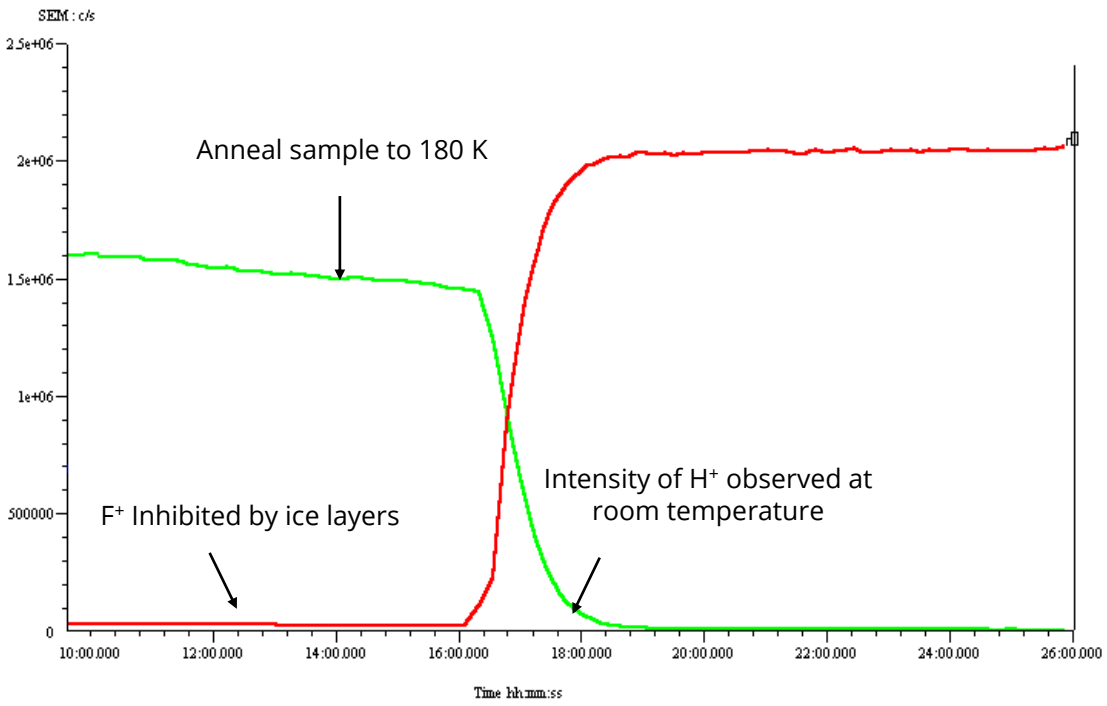

IDP – Example Data 3 : profile mode

Data from: IDP 300 mass spectrometer - 300 amu mass range

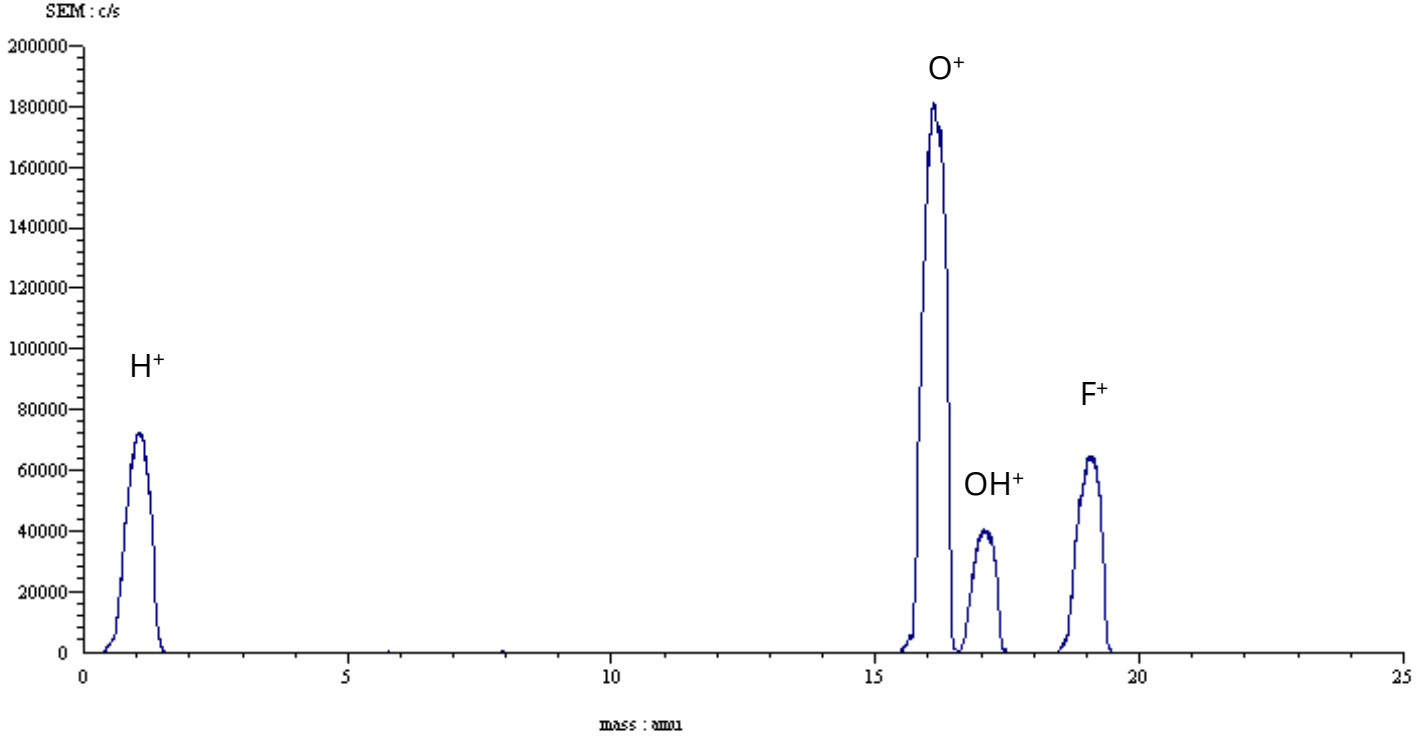

The data is displayed in an analogue form, and used to optimise the tuning process and confirm the peak shape and resolution. The example illustrates a mass profile spectrum of surface ions desorbed from a TiO_2 surface during electron beam exposure.

IDP - Example Data 4 : dynamic multi mode scan

Data from: IDP 300 mass spectrometer - 300 amu mass range

DMM-dynamic multi mode scan. All of the controlled ion optical & ion source parameters can be scanned with respect to a specific mass for the optimisation of transmission, and for characterisation of the ionisation of neutrals. Determination of the energy of a desorbed ion by automatically scanning the mid-axis potential of the quadrupole to present the ions with a retarding field is one example for use of DMM.

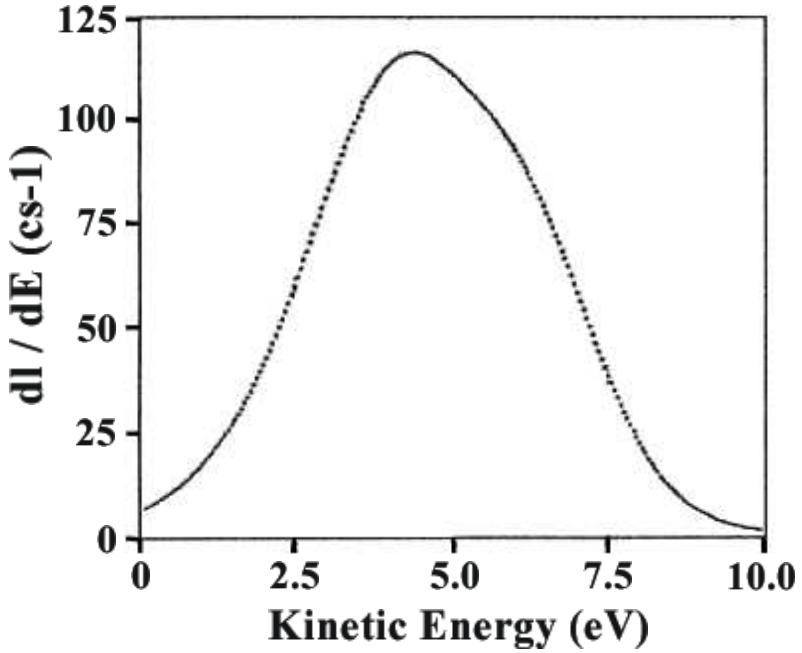

The spectrum shows a typical ion energy distribution curve (IED) for O+ desorbed from a TiO_2 interface via the ESD process. The raw data is differentiated to obtain the IED with a most probable energy of ~4 eV and FWHM of ~ 4.5 eV.

EGAsoft – PC software application

EGAsoft – Collect MS data and temperature in the same program.

Includes special features for thermal analysis applications, temperature programmed desorption and evolved gas analysis for example.

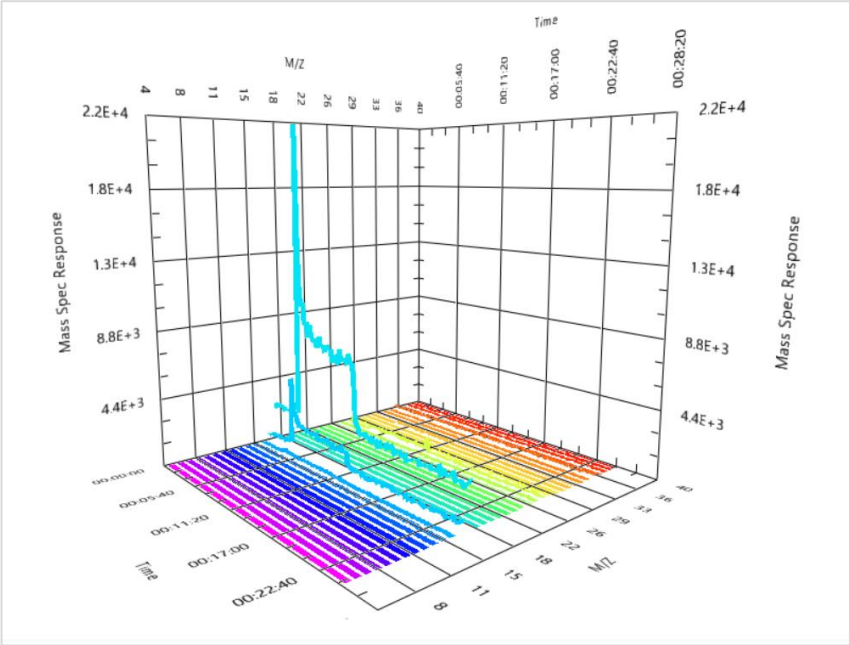

3D bar data view in EGAsoft

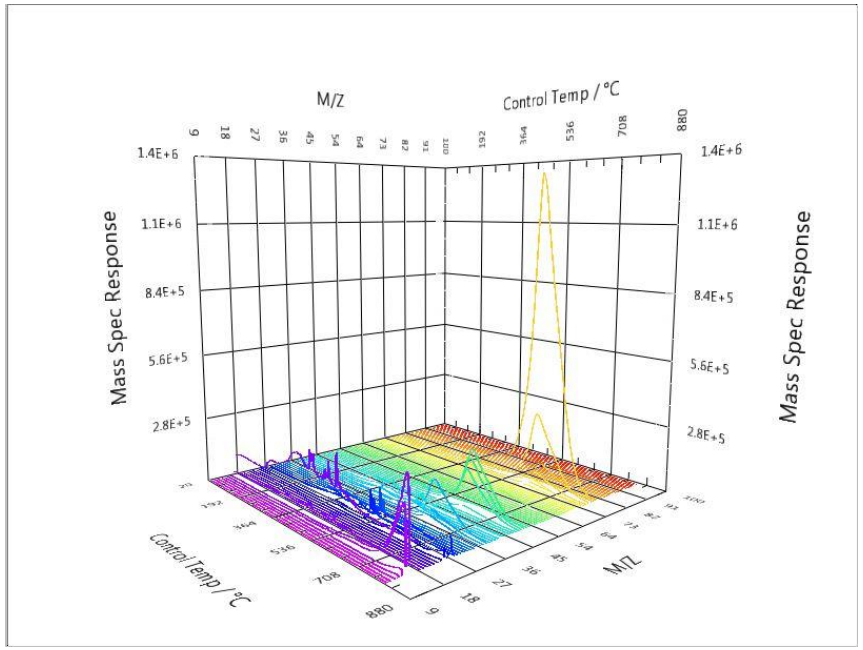

MS response vs. temperature

MASsoft Professional control software

- Template driven quick start operation
- Real time data display
- Mixed mode scanning including trend analysis
- Statistical analysis and peak integration
- Integrated mass spectral library

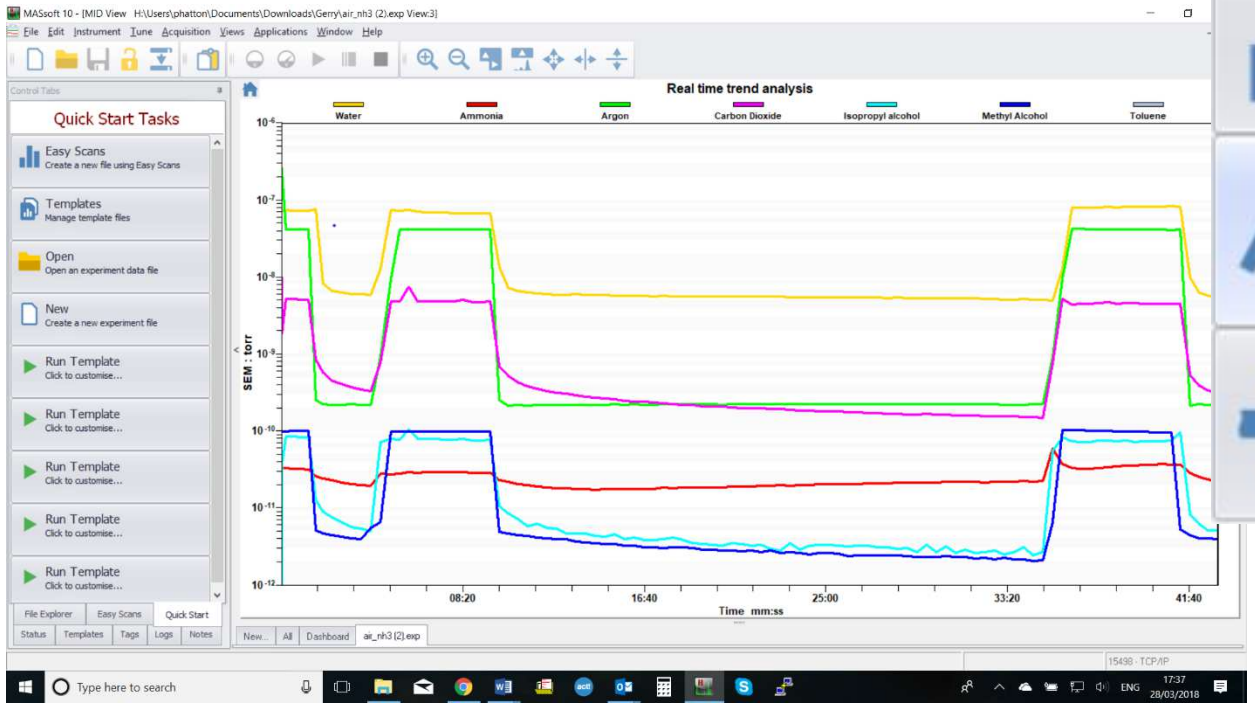

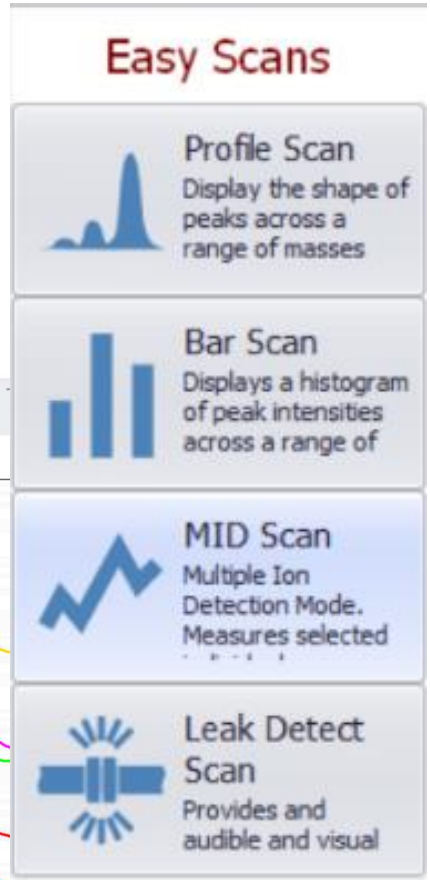

Summary

- High performance RGA with additional pole bias mid-axis potential negative ion capability and 4 lens ion optics.
- Designed and manufactured by Hiden in the UK, completely factory-upgradable and compatible with the Hiden plasma/SIMS series
- Suitable for residual gas analysis plus UHV surface studies, TPD, Electron stimulated desorption and Photon stimulated desorption.

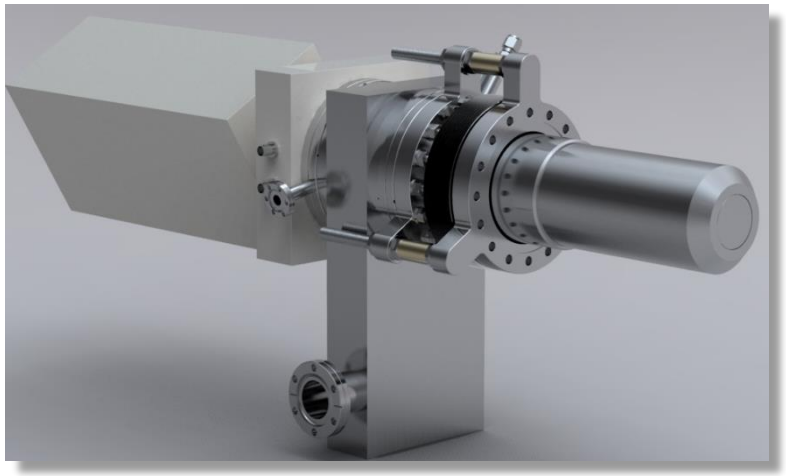

Hiden Customers include:

- Samsung
- NASA
- Intel Corporation, USA
- CERN
- Carl Zeiss, Germany
- California Institute of Technology
- Brookhaven National Laboratory
- Corning
- CCFE (JET)
- Durham University
- National Physical Laboratory
- Jozef Stephan Institut
- Max Planck Institut
- Bern University
- Rutherford Appleton Laboratory
- SLAC National Accelerator Laboratory
- University of Sao Paulo
- Los Alamos National Lab

- www.HidenAnalytical.com
- The Hiden website is an excellent resource with product pages, brochures, catalogues, product pages with some application notes, presentation and other information.
- Contact +44 1925 445225 for direct support.