www.hidenanalytical.com
info@hiden.co.uk

HIDEN ANALYTICAL

Hiden HPR-20 TMS

Transient MS for Fast Event Gas Analysis

Hiden Analytical
HPR-20 TMS
HIDEN ANALYTICAL

Introduction

The Hiden HPR-20 TMS is configured for continuous analysis of gases and vapours at pressures near atmosphere.

Operating to 200°C, the QIC (quartz inert capillary) flexible 1m capillary inlet provides fast response times of less than 150 ms.

The HPR-20 TMS system has a mass range of 200 amu (300, 510, 1000 amu options) and a detection capability from 100% to less than 5 ppb.

The TMS system is optimised for fast response studies and can respond to changes in gas composition with a 5 decade response time in <200 ms.

TMS – for Fast Event Studies

Features of the system to optimise the response for fast event studies include:

- Pulse Ion Counting detection with 7 decade continuous log scale
- 1m capillary gives <150 ms response time
- Open ion source increases pumping speed on ion source

Ultra-fast response

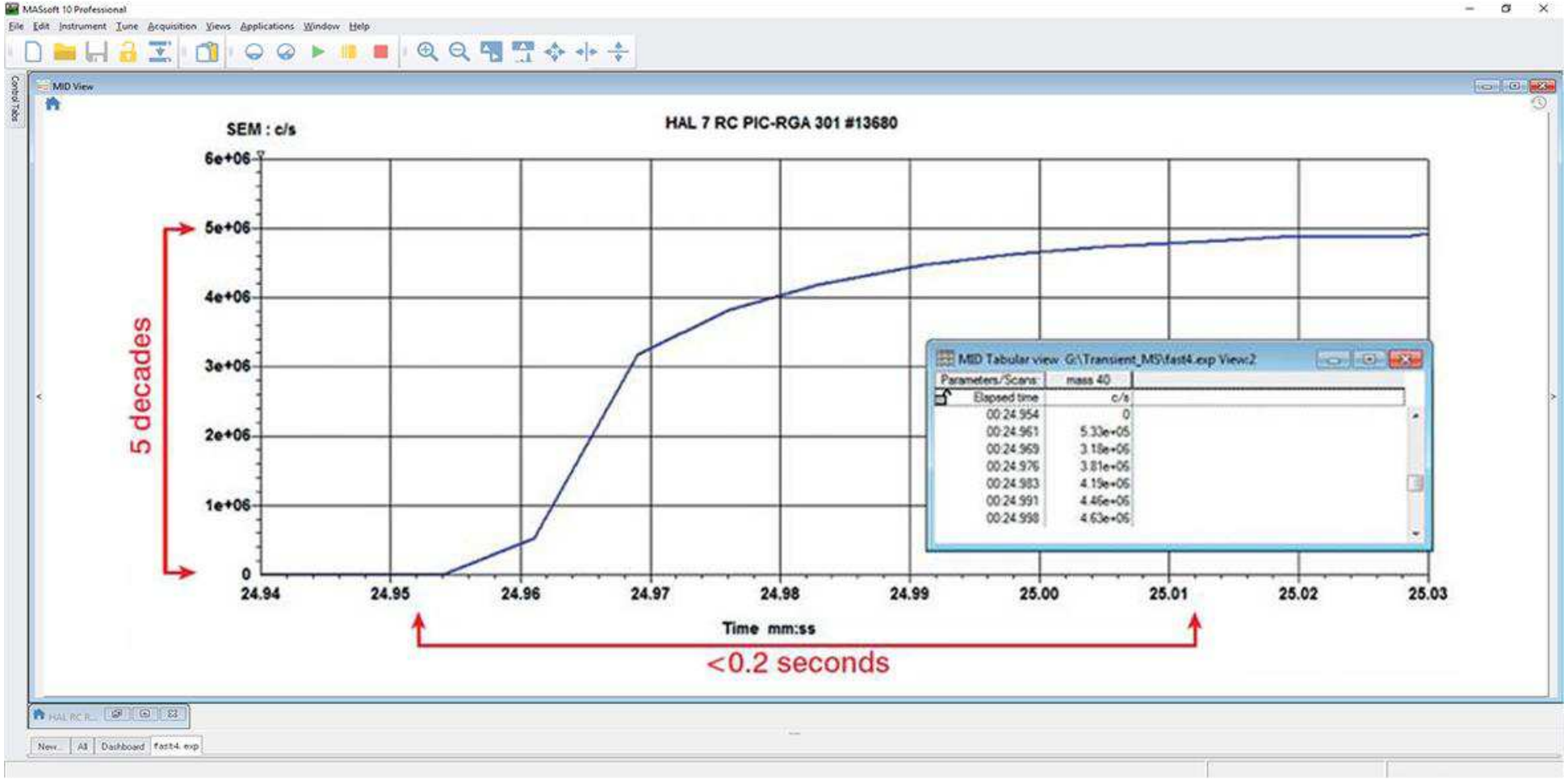

HPR-20 TMS: > 5 decades response in < 0.2 s

Ultra-fast response

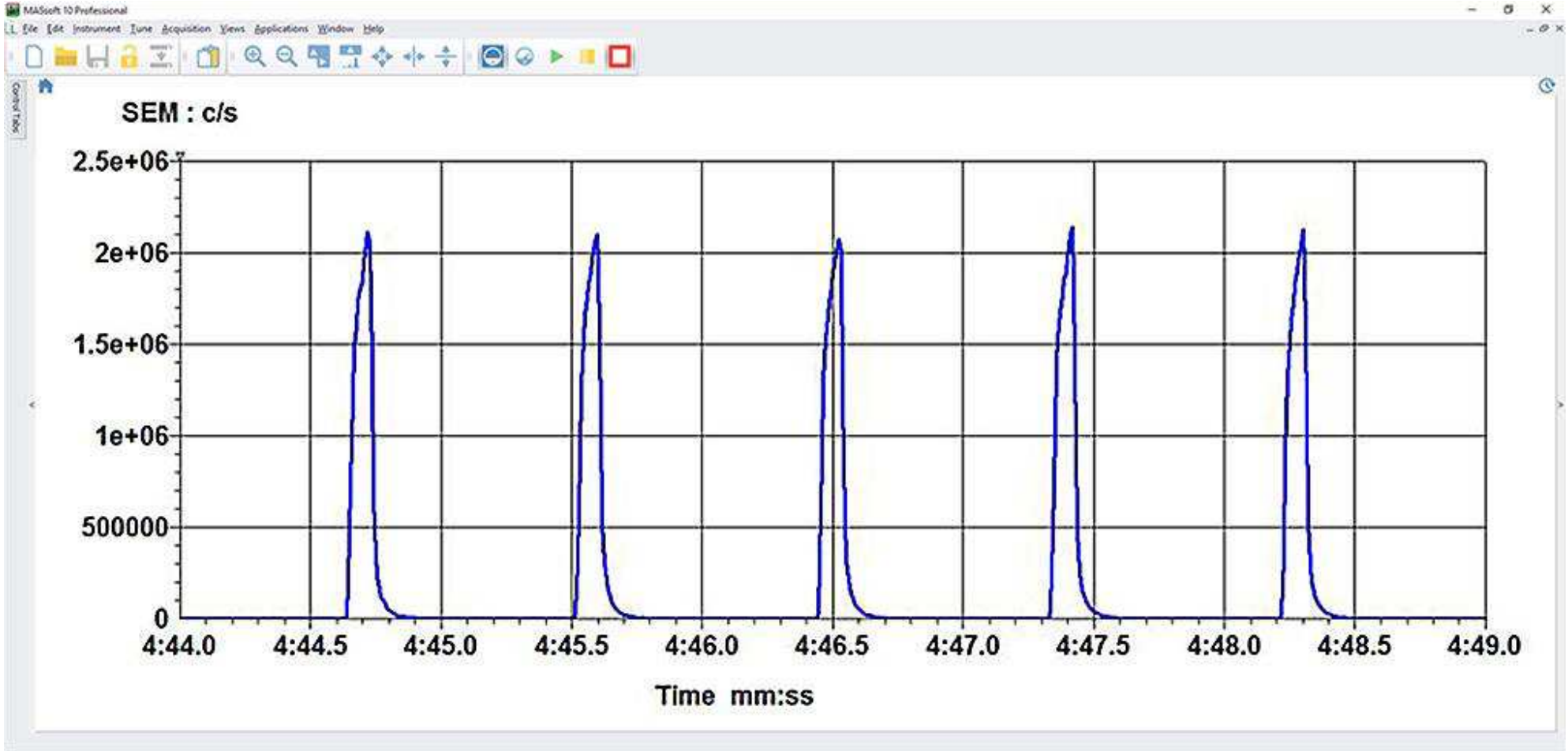

The HPR-20 TMS tracks the changes in concentration of fast gas pulses with incredible response and accuracy over more than 5 decades. This data shows the measurement of 5 pulses in 5 seconds.

HPR-20 TMS Vacuum Schematic

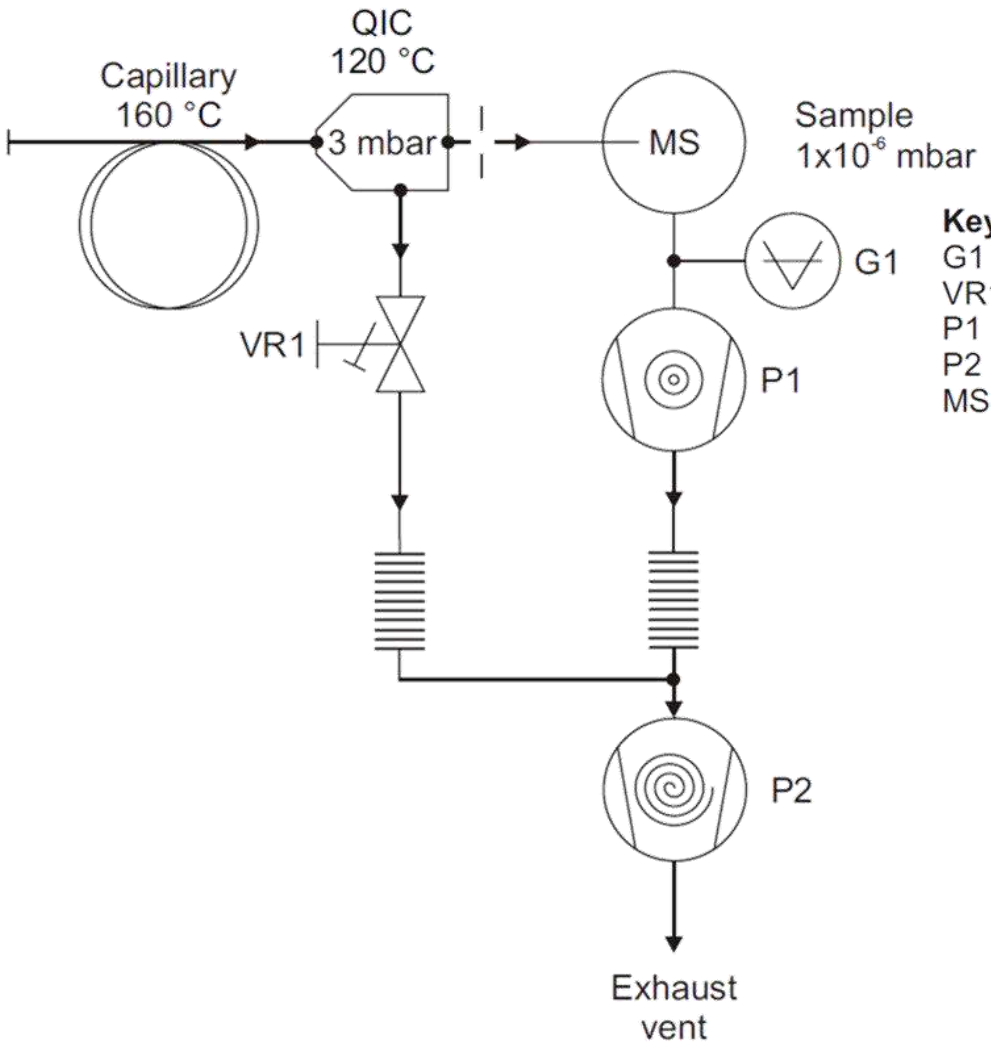

Key
G1 Penning gauge
VR1 QIC Inlet bypass control valve
P1 60 l/s turbo drag pump
P2 Backing and bypass Scroll pump
MS UHV Housing (Mass spectrometer chamber)

Backing and bypass Scroll Pump

HPR-20 TMS Analyser:

Hiden HAL 3F PIC Triple Filter Mass Spectrometer

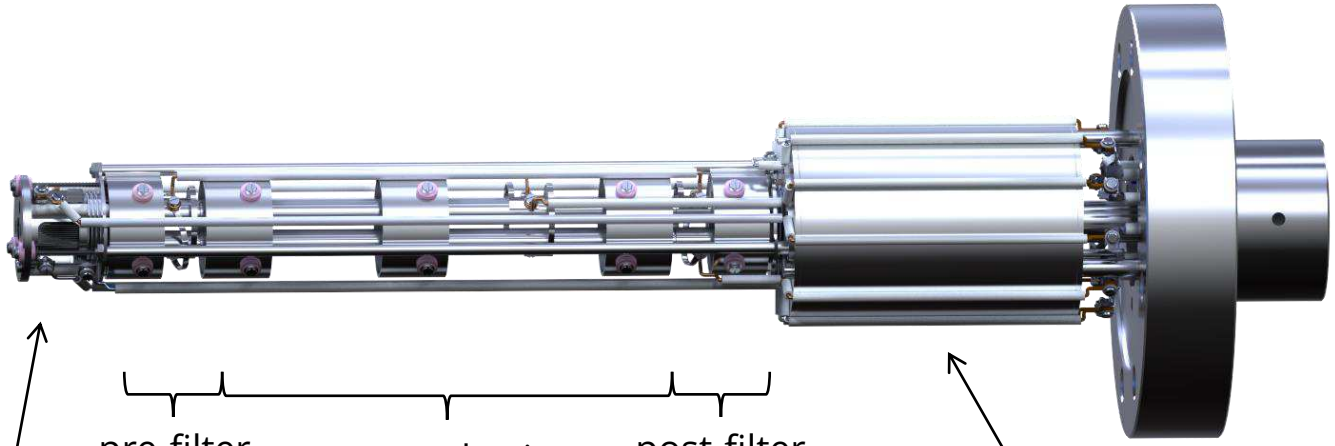

pre-filter

mass selective primary filter

post-filter

open electron impact ionisation source

digital Pulse Ion Counting (PIC) channeltron secondary electron multiplier detector

Triple Filter Mass Spectrometer

Why have a triple filter?

Two main advantages:

1. Strict control over the quadrupole entrance and exit fields provides enhanced sensitivity for high mass transmission and increased abundance sensitivity

2. Enhanced long-term stability. The bulk of the deselected ions from the quadrupole ioniser deposit harmlessly on the RF-only pre-filter stage, minimising contamination on the mass selective primary filter.

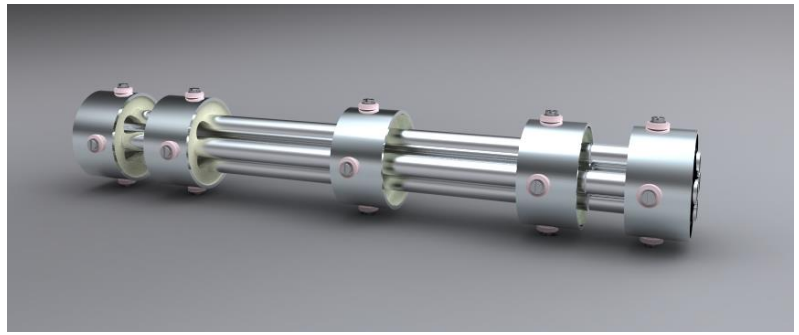

QIC Inlet Technology

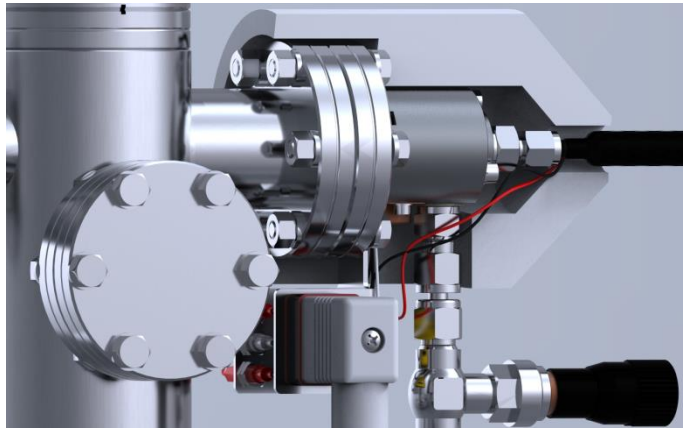

Quartz and Platinum Wetted Surfaces	→	No memory effects
Heated Capillary	→	No condensation effects
Flow Matched	→	Optimum response / recovery
Minimal Internal Volume	→	PPB detection
Interchangeable Sampling Capillaries	→	Analysis from 10 mbar to 2 Bar

Typical Mass Spectrum of Air

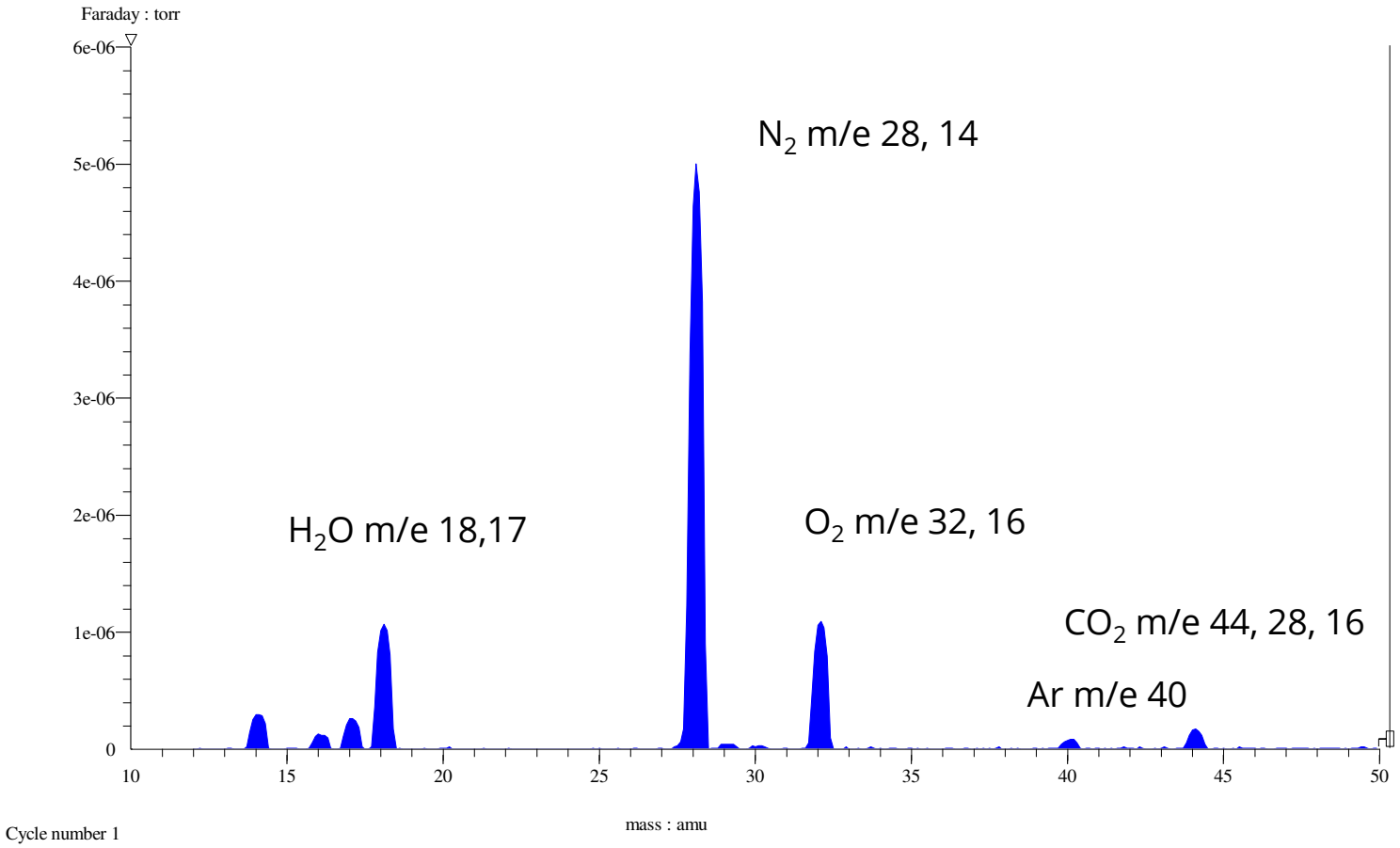

Note: Different species can have the same mass e.g. CO, N_2 m/e 28

Soft Ionisation

Unique to Hiden gas analysis systems, soft ionisation allows users to selectively ionise different gases by setting the ionisation energy for a particular mass.

This powerful technique can simplify the analysis of otherwise complex cracking patterns from multi-component gas/vapour mixtures.

The ionisation energy can be altered from 4 to 150 eV, in 0.1 eV increments. Standard operation is at 70 eV.

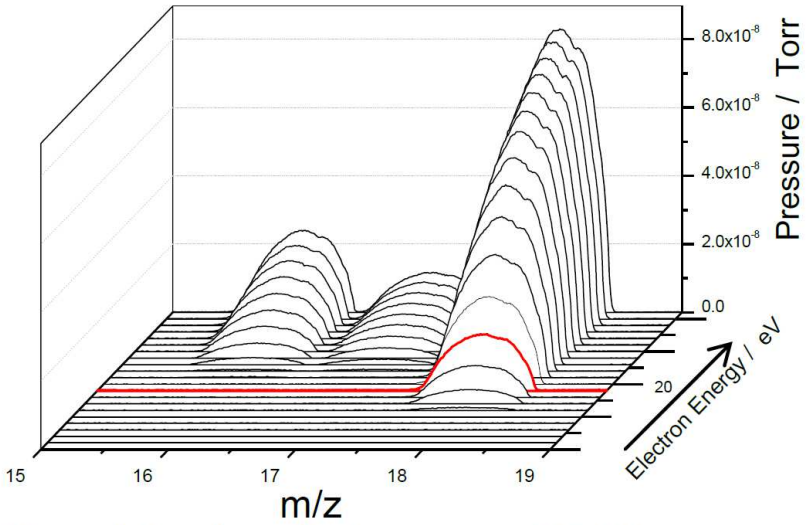

Figure 1 A: m/z *vs* Electron energy-H_2O/Air

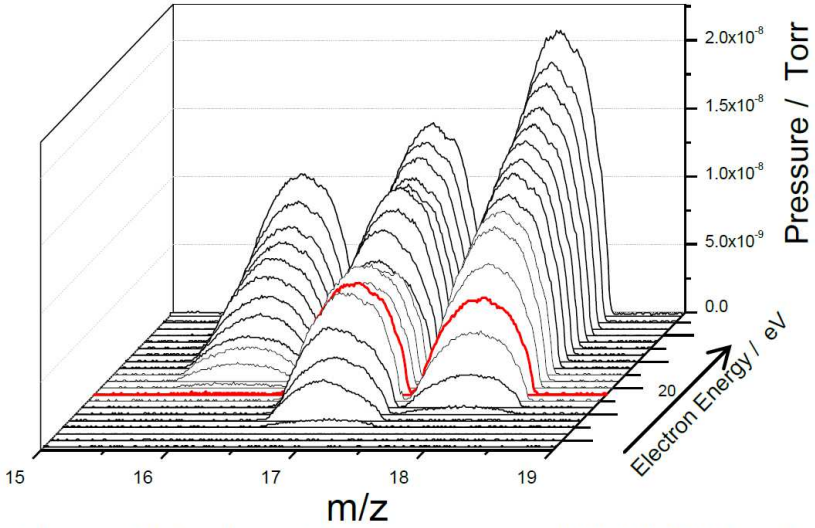

Figure 1 B: m/z *vs* Electron energy-NH_3/ H_2O/Air mix

MASsoft Professional control software

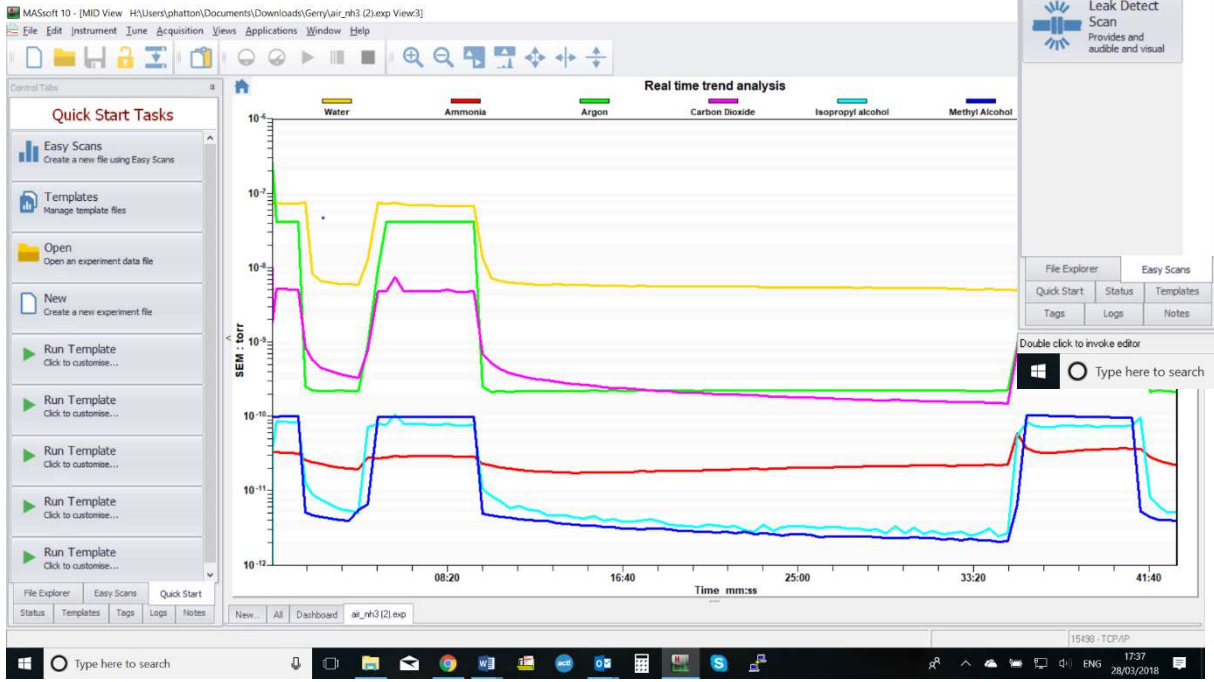

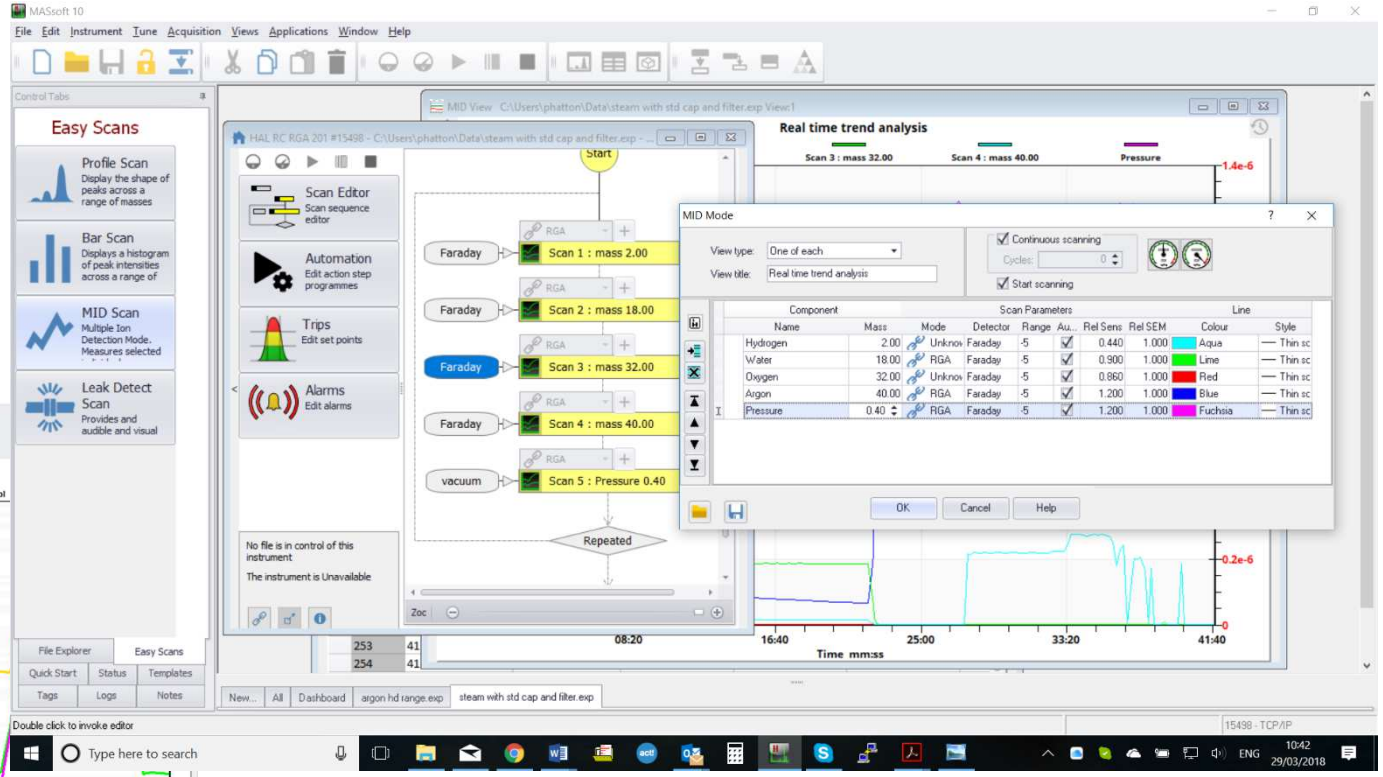

A multi-level software package allowing both simple control of mass spectrometer parameters and complex manipulation of data plus control of external devices.

HPR-20 TMS - Applications

- Fast event studies
- Reaction kinetics
- Selective Catalytic Reduction (SCR)
- Steady State Isotopic Transient Kinetic Analysis (SSITKA)
- High speed switching analysis
- Operando studies
- SpaciMS

Applications: Catalysis Research

A kinetic study of the effect of H_2 on the Selective Catalytic Reduction of NO_x with octane using isotopically labelled ^{15}NO, using an HPR-20 QIC TMS system.

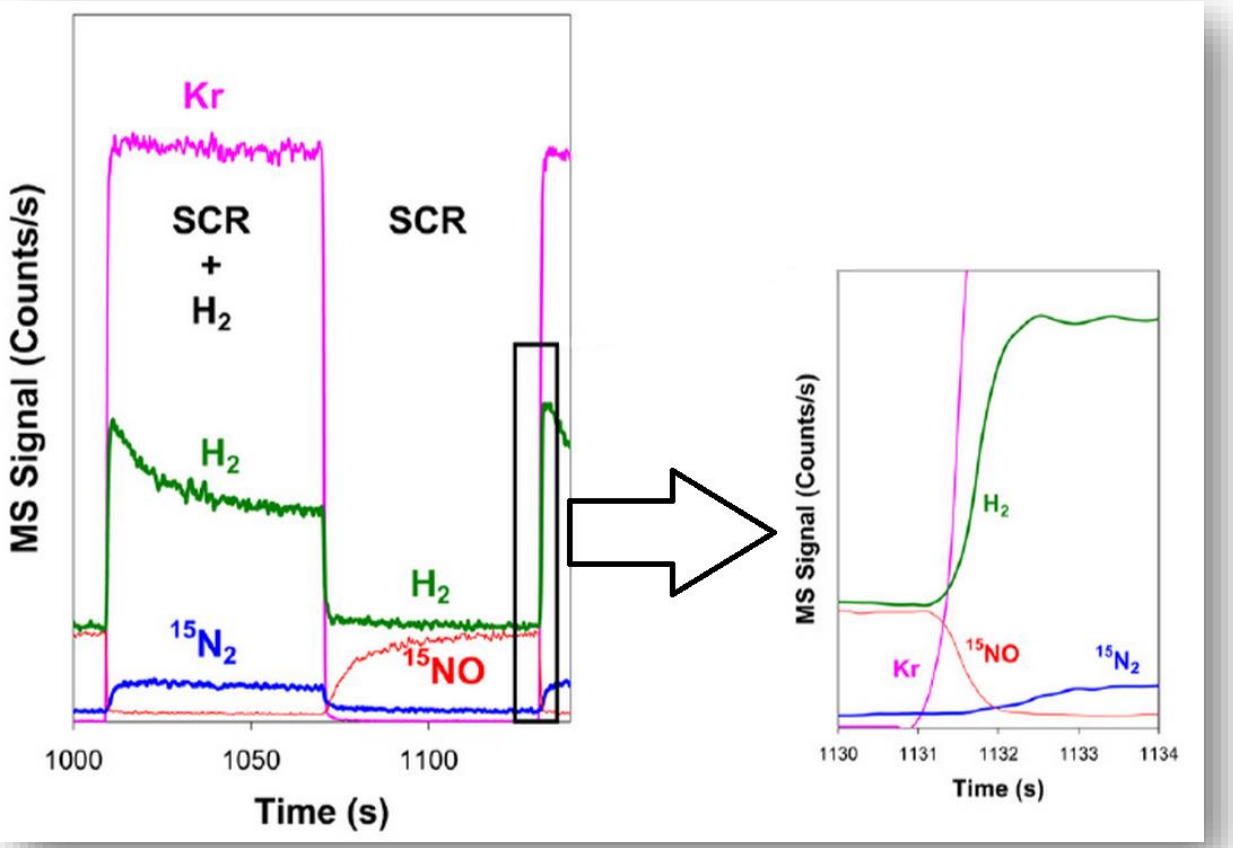

Figure 1. Mass spectrometer response for $^{15}N_2$, ^{15}NO, H_2 and Kr when switching 0.72% H_2 in and out of a SCR feed stream over the catalyst at 300°C.

Ref: J. P. Breen, R. Burch, C. Hardacre, C. J. Hill and C. Rioche (2007). *J. Catal.*, 2007, 246, 1, p1-9.

Applications: Breath Analysis

Breath by Breath Analysis of Expired Isoprene during Exercise

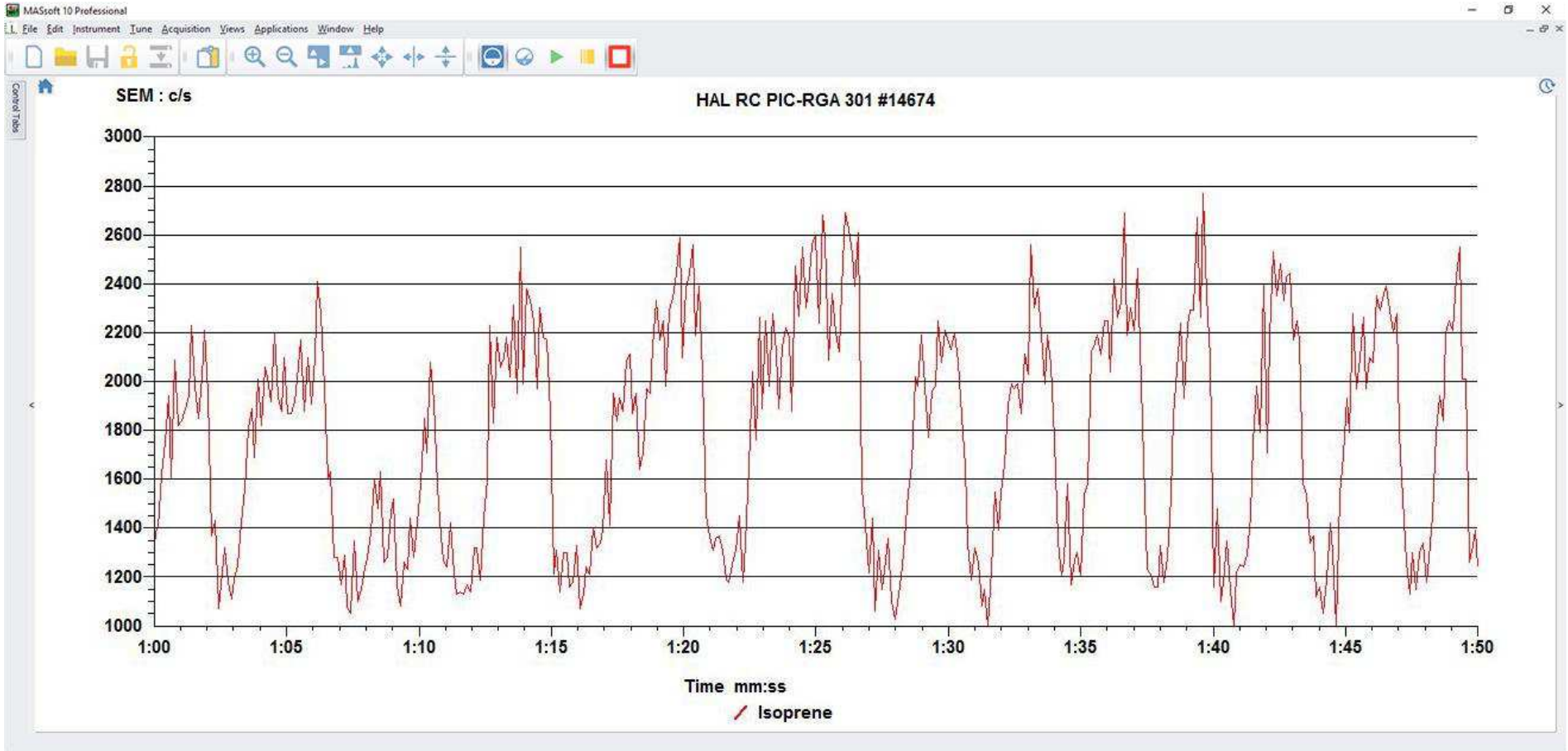

HPR-20 TMS data showing breath by breath isoprene levels during an exercise test.

Hiden HPR-20 Users

NASA
Dow Chemical
Exxon-Mobil
Imperial College
MIT
University of British Columbia
University of Queensland
BASF
Seoul National University
Suzuki
University of Cambridge
Beijing Institute of Technology
Samsung
ETH Zürich
KAUST
Durham University
Siemens
Shell

Summary

- Specifically designed for fast event studies – less than 150 ms response time
- Bench-top triple filter quadrupole mass spectrometer gas analysis system
- Real-time, multi-species analysis – 5 PPB to 100%
- Soft ionisation for reduced spectral fragmentation and simplified data interpretation

- www.HidenAnalytical.com
- The Hiden website is an excellent resource with product pages, brochures, catalogues, product pages with some application notes, presentation and other information.
- Contact +44 1925 445225 for direct support.