www.hidenanalytical.com
info@hiden.co.uk

HIDEN ANALYTICAL

# Hiden EPIC

## Quadrupole Mass Spectrometer for Scientific Applications

# EPIC Applications

The Hiden EPIC can be used for applications beyond the standard RGA including:

- UHV surface science
- Electron stimulated desorption
- Photon stimulated desorption
- Thermal desorption studies
- Radical analysis
- Clusters
- Time resolved studies

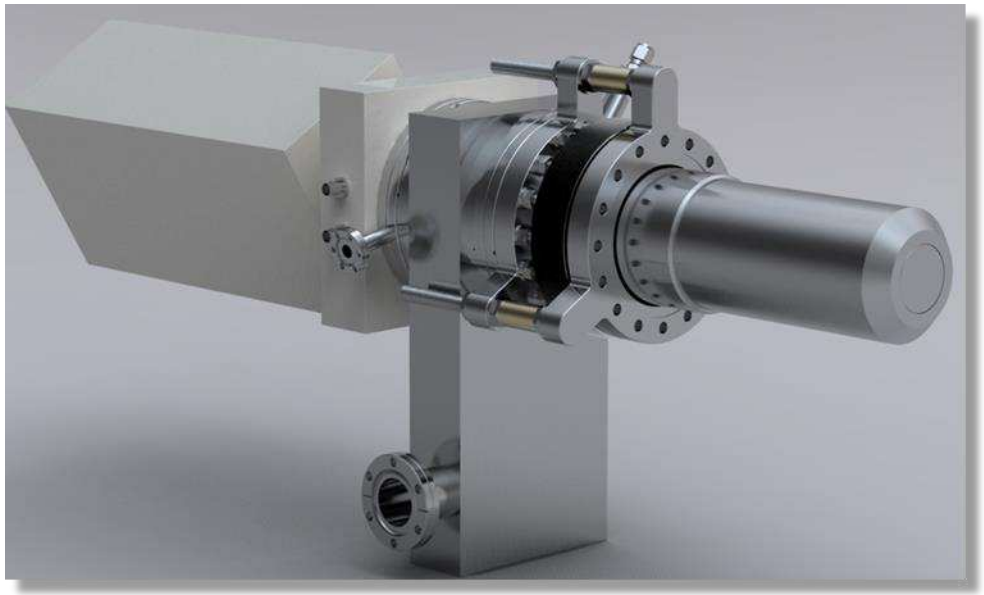

# The EPIC Advantage

- Pole bias mid-axis potential
- Negative ion capability
- Factory upgradable for inclusion of an energy filter ensuring compatibility with the Hiden plasma/SIMS systems
- Suitable for Electron Attachment Mass Spectrometry

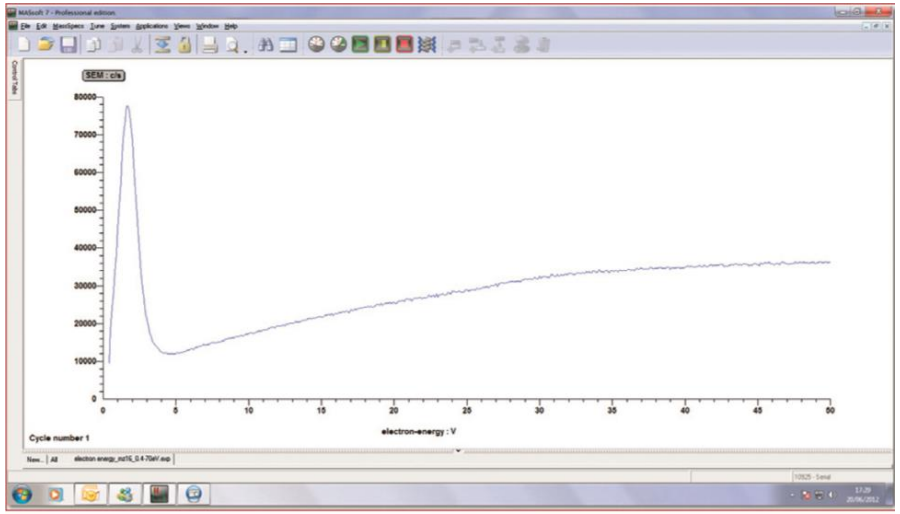


*$O^-$ ions formed by dissociative electron attachment*
*$e + N_2O \rightarrow N_2 + O^-$*

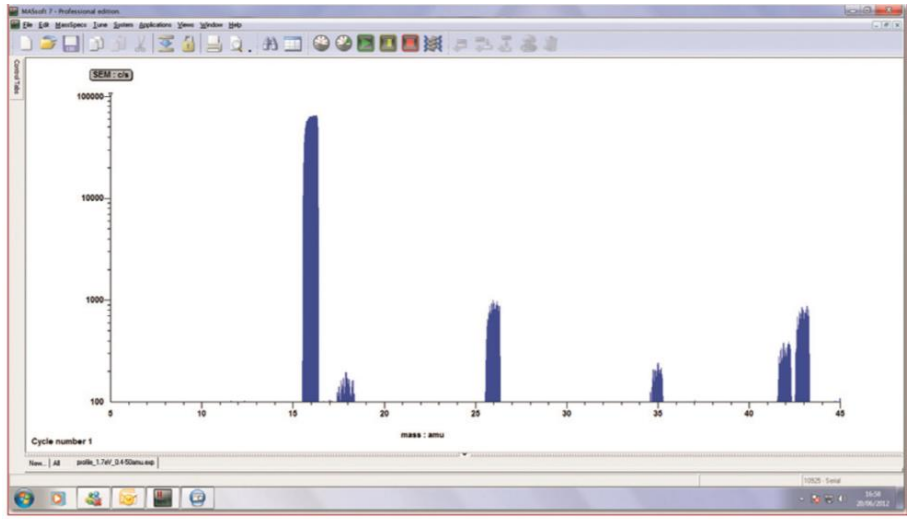


*Mass spectrum of negative ions formed by low energy electron attachment*

# Triple Filter Mass Spectrometer

Why have a triple filter?

Two main advantages:

1. Strict control over the quadrupole entrance and exit fields provides enhanced sensitivity for high mass transmission and increased abundance sensitivity

2. Enhanced long-term stability. The bulk of the deselected ions from the quadrupole ioniser deposit harmlessly on the RF-only pre-filter stage, minimising contamination on the mass selective primary filter.

Available configured with 6mm or 9mm pole diameter.

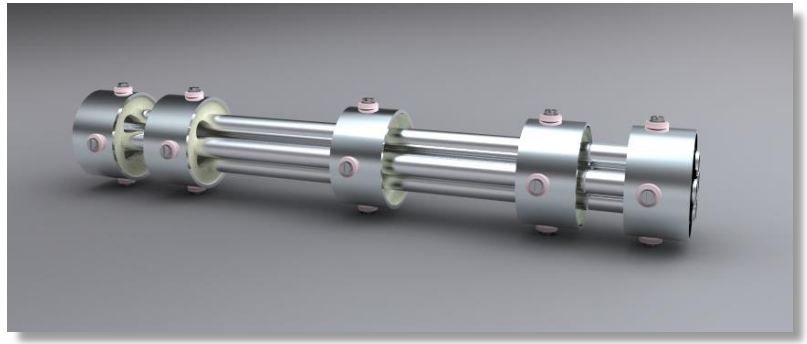

# Configuration

- Multiple ion source options
- Configured with 6mm or 9mm

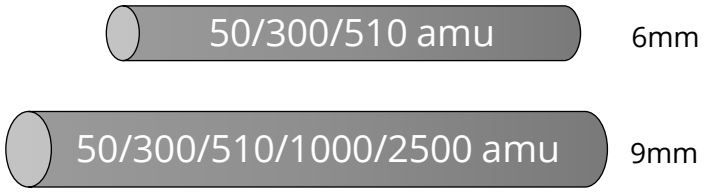


**What pole diameter do I need?**

- Total RF output power is fixed for a given generator
- Power demand increases dramatically with increasing RF frequency: ($\propto \nu^5$)
- For given mass, performance improves with increasing frequency
- For given tolerances, transmission and mass separation improve with increasing pole diameter
- Overall **size** and **cost** increase with increasing pole diameter
- Enlarging pole diameter increases assembly capacitance and limits RF range (increases power losses)
- It is cost effective to keep the pole size to a minimum.

# EPIC System – 6mm pole diameter

Shown with stainless steel shroud

Mass range options: 50, 300 or 510 amu

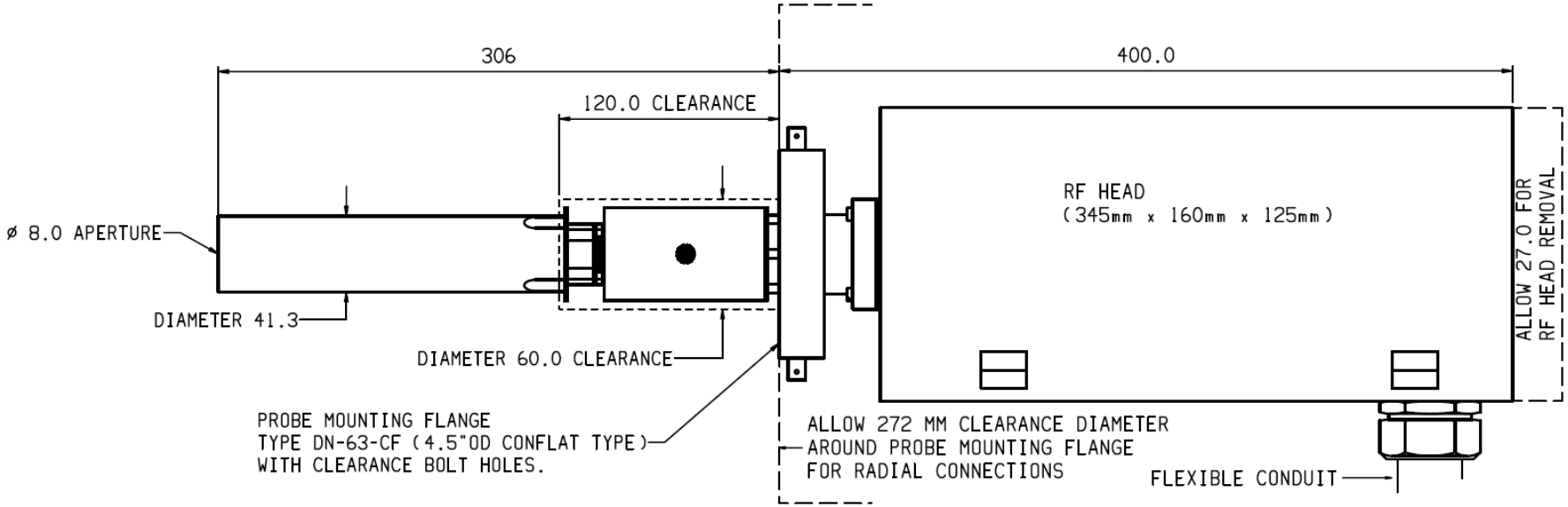

# EPIC System 9mm pole diameter

with flange adapter for mounting on a DN-63-CF
114mm diameter, 4.5 “ conflat flange.
Mass range options: 50, 300, 510, 1000 or 2500 amu

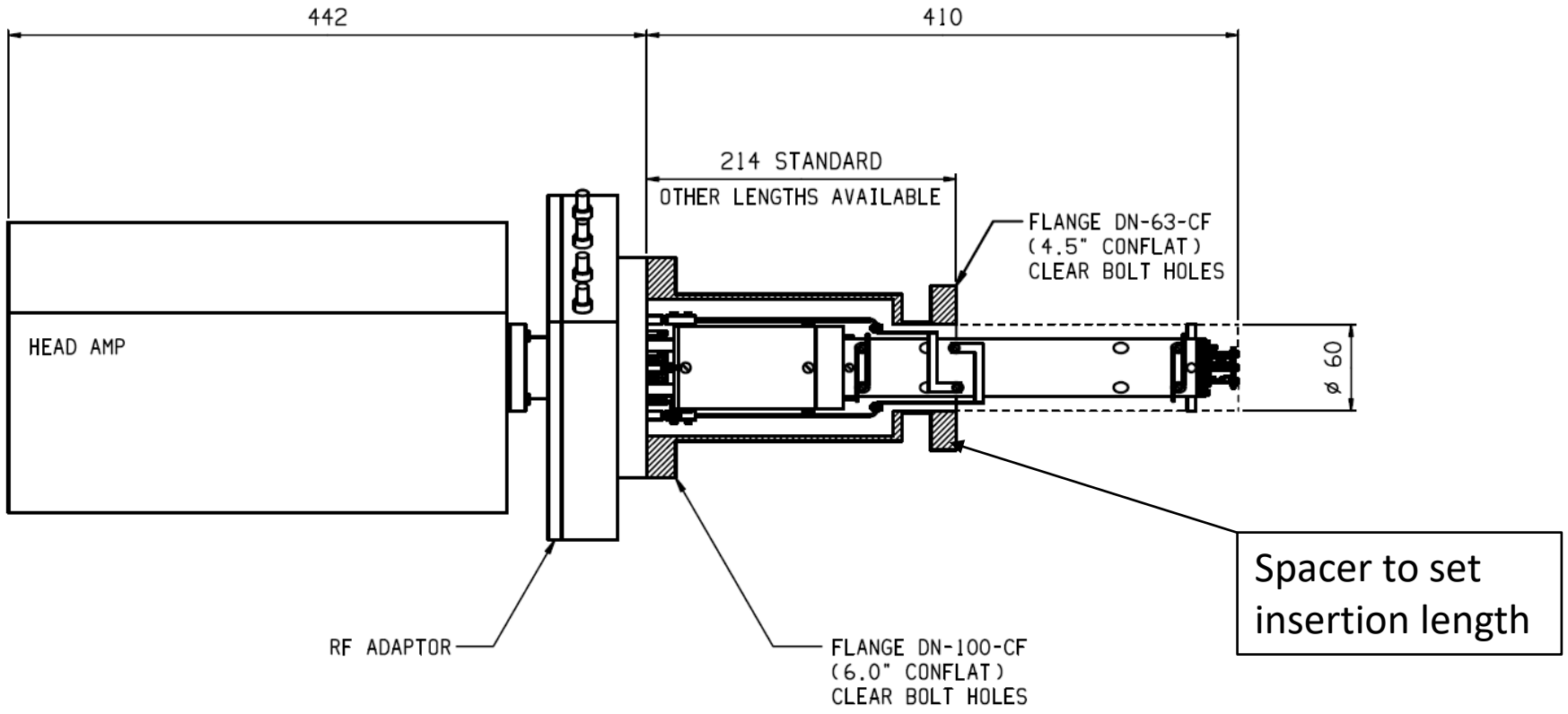

# Electron Impact (EI) - Ion Source

UHV Low Profile EI source – Included as standard for EPIC systems

Twin filaments – Yttria coated iridium

Ion Source parameters are software settable, controllable and can be scanned over a wide range:

| Parameter | |
|---|---|
| Emission | 1 to 2000 µA |
| Electron Energy | 0.1 to 150 eV |
| Ion Energy | 0 to 10 eV |
| Probe Axis Potential | - 100 to +100 eV |
| | - 1000 to +1000 eV (Optional) |

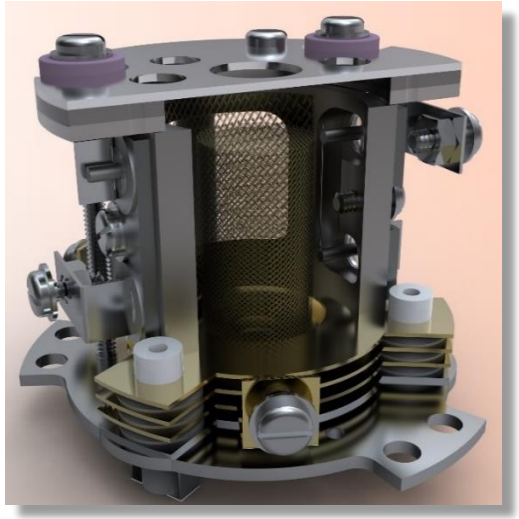

Optimised for UHV TPD studies enabling closer proximity of the ion source to the evolution surface

# Ion Source Options

**Basic Cross Beam** – Used for analysis on molecular beams, where the beam may be liable to condense on ioniser surfaces. The source features an unobstructed pathway through the ionising region of the source. External shrouds are available to protect the quadrupole mass filter from the condensing species

**Laser Cross Beam** – Includes two orthogonal unobstructed pathways for laser photon ionisation within the source cage region, providing an alternative to electron impact and electron attachment ionisation

# Ion Source Options

**4 Lens Ion Optics with Integral Ioniser** – Additionally enables analysis of low energy positive and negative ions generated externally to the analyser. For electron, photon and laser stimulated desorption studies. Included as standard in Hiden IDP systems.

**Platinum Ion Source** – Configured for improved operation in reactive glasses. Radially symmetric, UHV compatible.

**Gold Plated Ion Source** – Configured to minimise the effects of source outgassing. Radially symmetric, UHV compatible. Available as standard or low profile options.

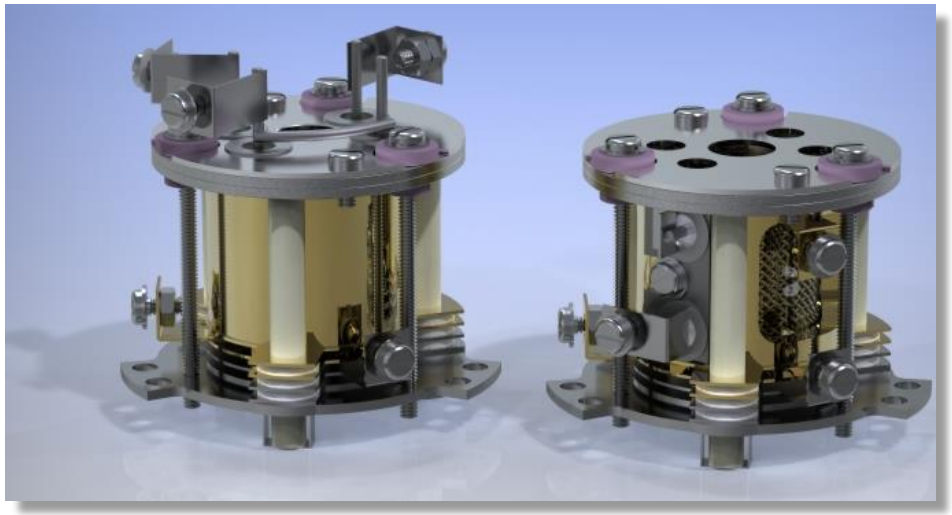

# UHV compatible mass filter shrouds

*Range of Shrouds*

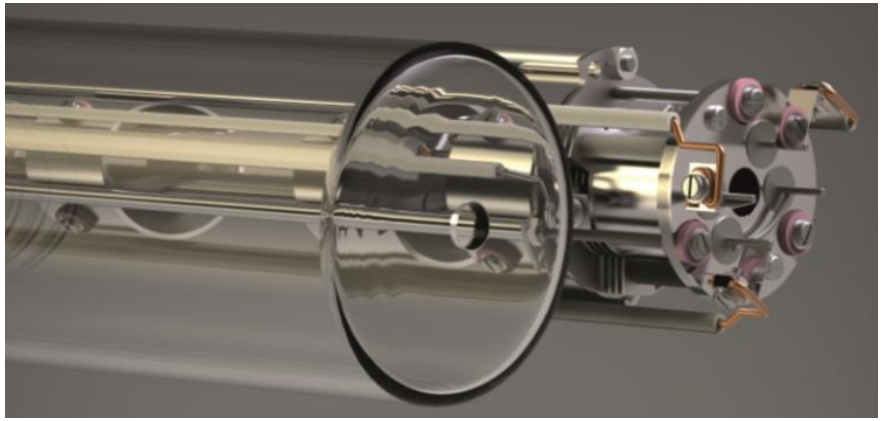

*EPIC 300 and quartz shroud*

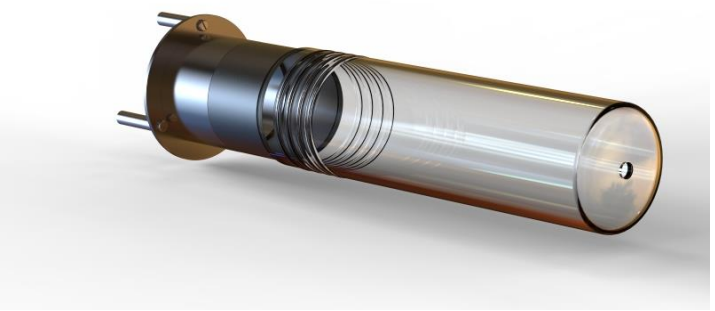

*Quartz shroud for UHV-TPD*

# EPIC – Detector

## Secondary Electron Multiplier SEM detector for positive and negative ions

- Secondary Electron Multiplier detector for positive and negative ions
- Fast pulse ion counting detector with continuous 7 decade measurement from 1 $cs^{-1}$ to $10^7$ $cs^{-1}$
- Analog detection mode with Faraday cup detector option extends dynamic range to > 10 decades
- Minimum detectable partial pressure: $5 \times 10^{-15}$ mbar

  1 $cs^{-1}$ ~ $1.3 \times 10^{-16}$ mbar

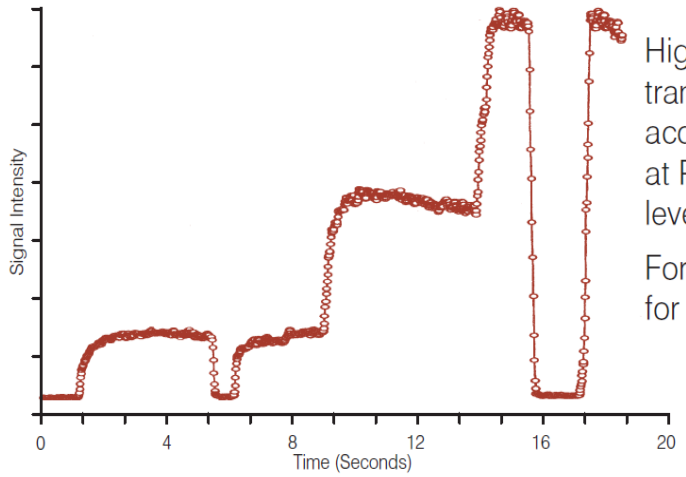


High quality transient data acquisition at PPM/PPB levels.

For UHV/TPD for example.

Pulse ion counting detection provides for fast data acquisition over a wide dynamic range.
Ideal for fast event studies at UHV.
UHV-TPD for example.

# Programmable Signal Gating

- Signal gating input with 0.1 µs resolution is standard.
- Enhanced signal gating modes including programmable signal gating and MCS are available as system options or upgrades.
- Programmable signal gating includes foreground and background delay timers to monitor two time zones with respect to a relative repeated event.
- Typical data acquisition time ~30 minutes.

**Features:**

- 0.1 µs minimum gate delay and width.
- Automatic background subtraction for modulated molecular beam studies.
- Ion flight time measurements.

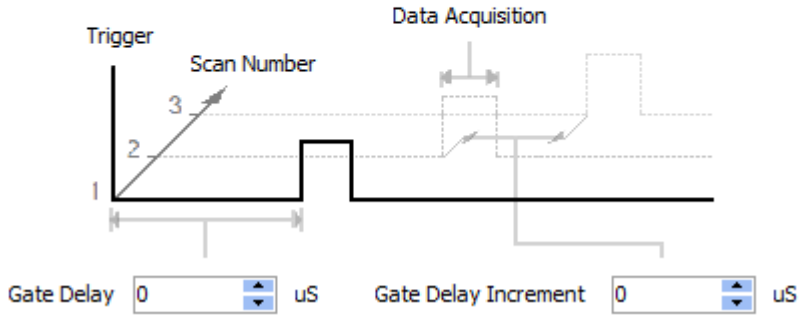

# Multi-Channel Scalar (MCS) Device

- Optional innovative Multi-Channel Scalar (MCS) device integrated into controller firmware and MASsoft Professional software.
- 6000-bin multichannel scalar resolution offering 50 ns time resolution.
- Data is intuitive to obtain and can be manipulated in external programmes such as Excel and Origin.
- Typical data acquisition time ~5 minutes.

Suitable for transient event analysis applications such as:

- Beam chopper inlets.
- Ion flight time measurements.
- Laser stimulated desorption.

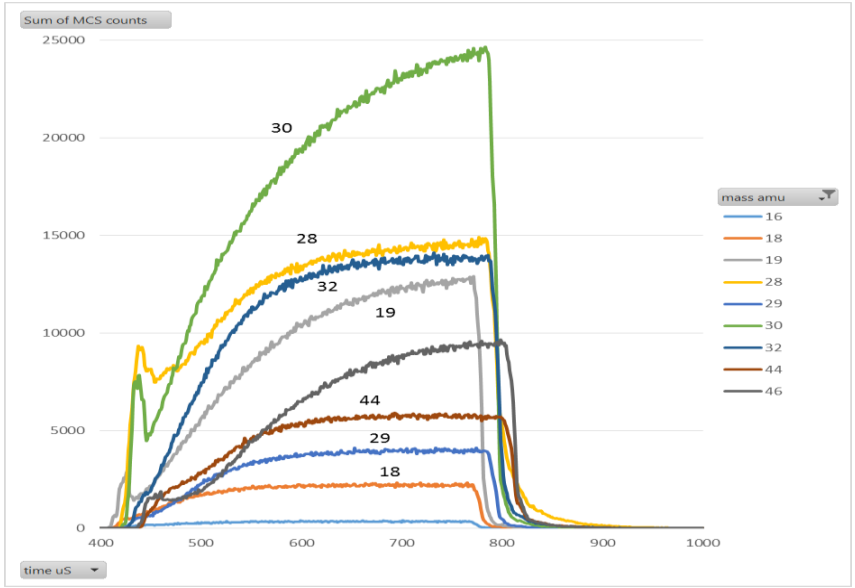

# EPIC – performance at UHV

Data from: EPIC 1000 series- 300 AMU mass spectrometer

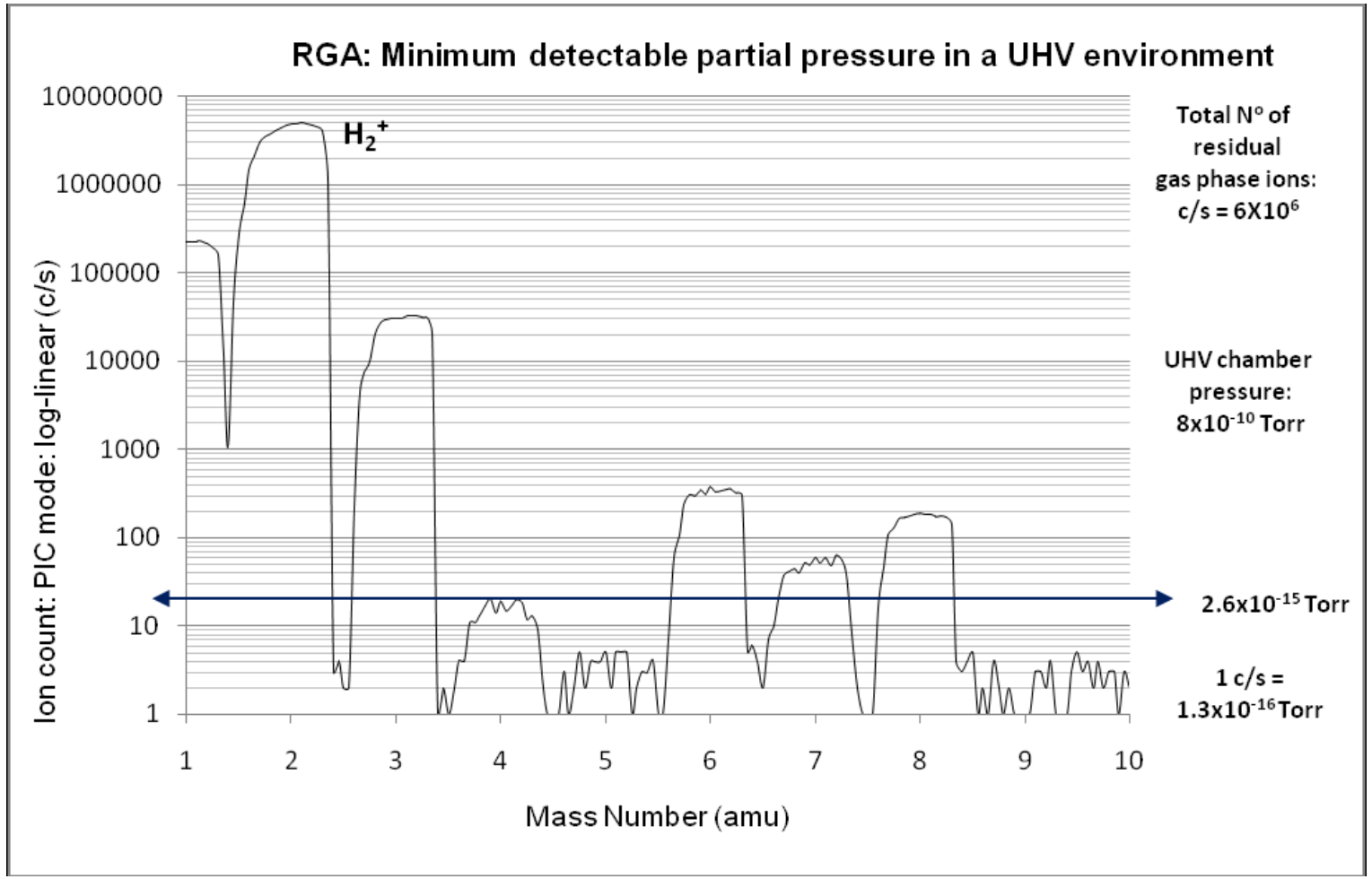

# Stability Measurements

*"Over two years the position of the flat peak measurement did not move significantly"*

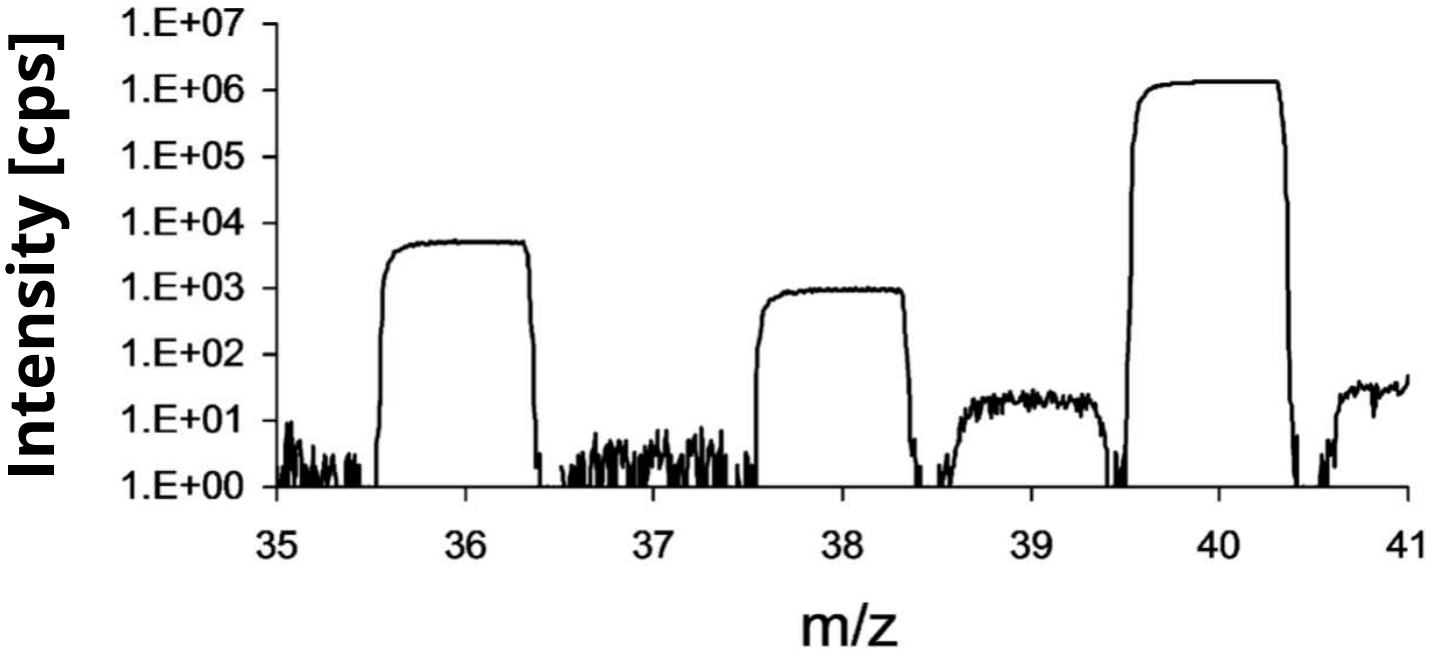


*High stability for precision isotope ratio measurement: $^{40}Ar/^{39}Ar$ geochronology research. Data taken by B Schneider et al.[1]*

# Application Specific Performance

## Data - 3F analyser 6mm pole diameter

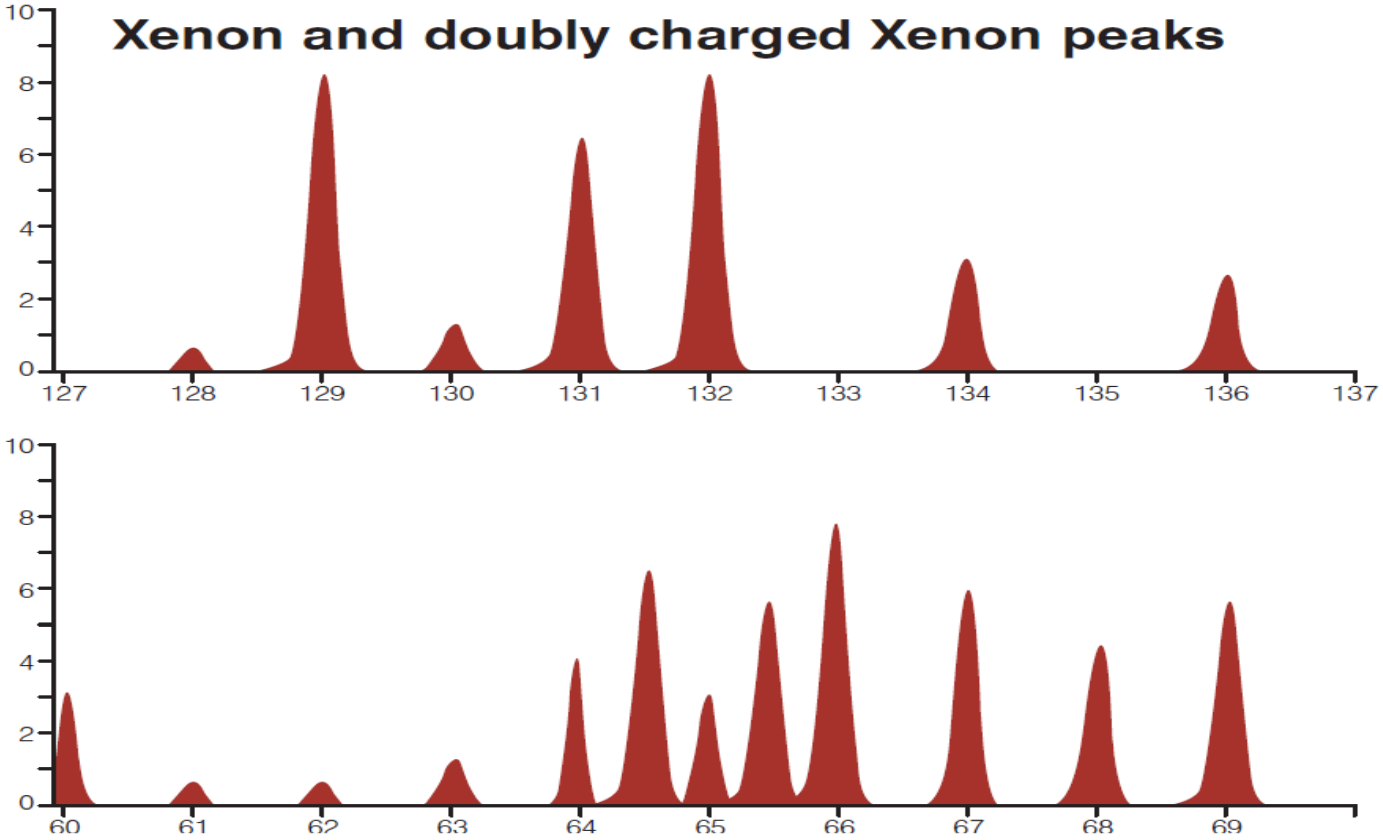


3F performance includes enhanced sensitivity for high mass species and increased resolution capablities.

# Precise Analytical Capability

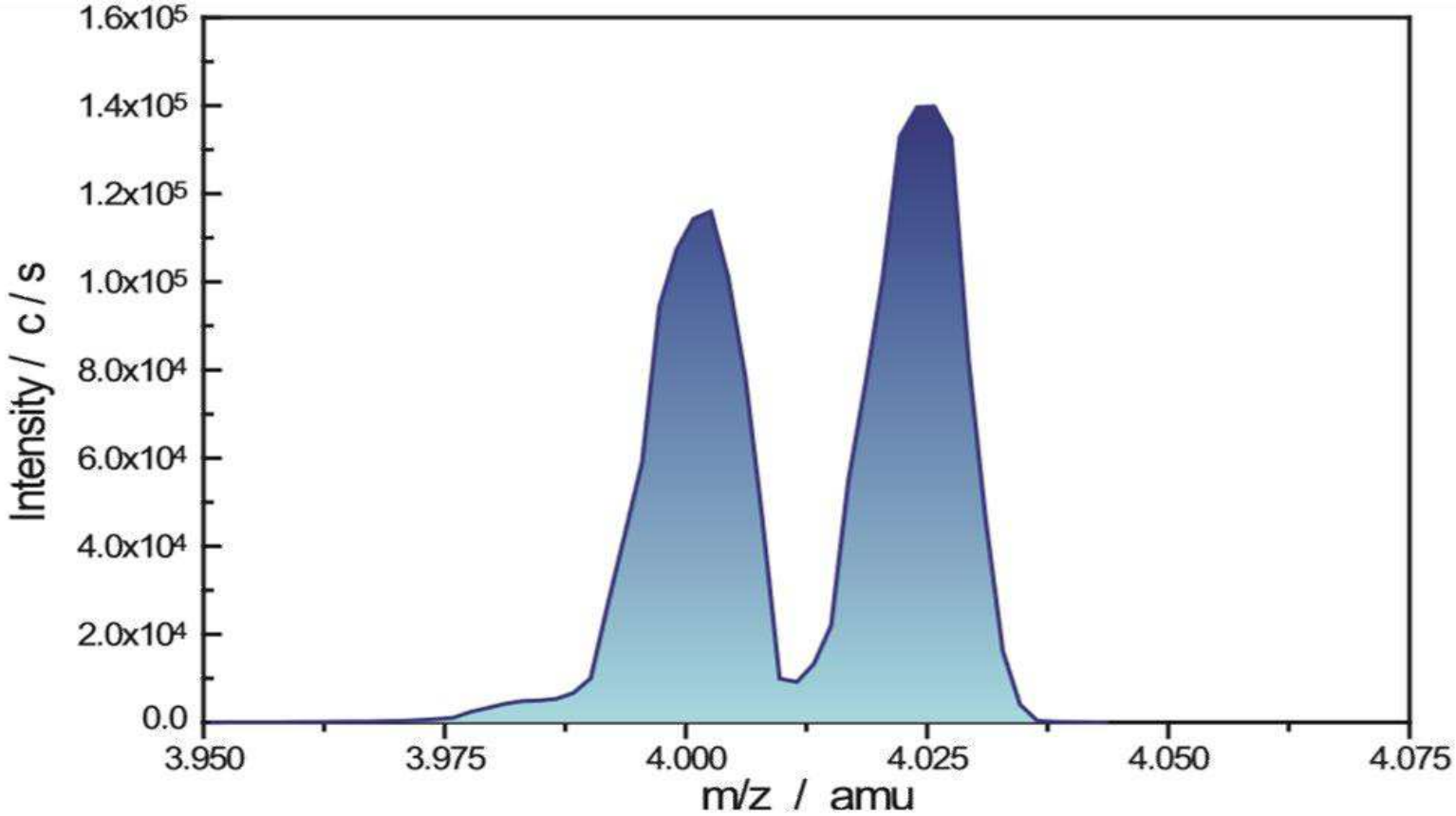


Ultra high resolution of the 3F system, 9mm pole diameter - 50 amu mass range system. Separation of the helium and deuterium peaks with a difference of only 0.0256.

# Precise Analytical Capability

Instrument performance examples – application tailored for optimised performance

3F analyser - 6mm pole

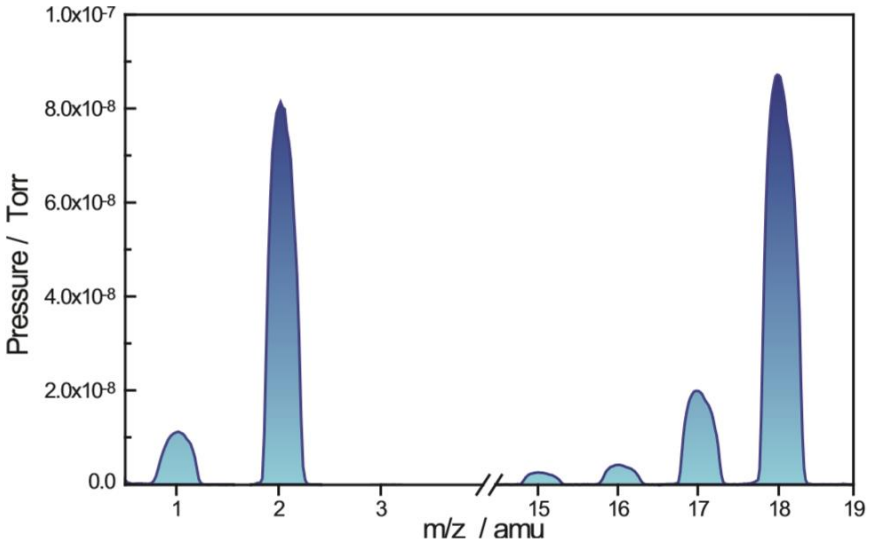


Low mass performance of the 3F system 6mm pole diameter - 50 amu mass range system. Excellent abundance sensitivity and peak separation over the entire 1- 50 amu mass range.

EPIC 1000 - 9mm pole

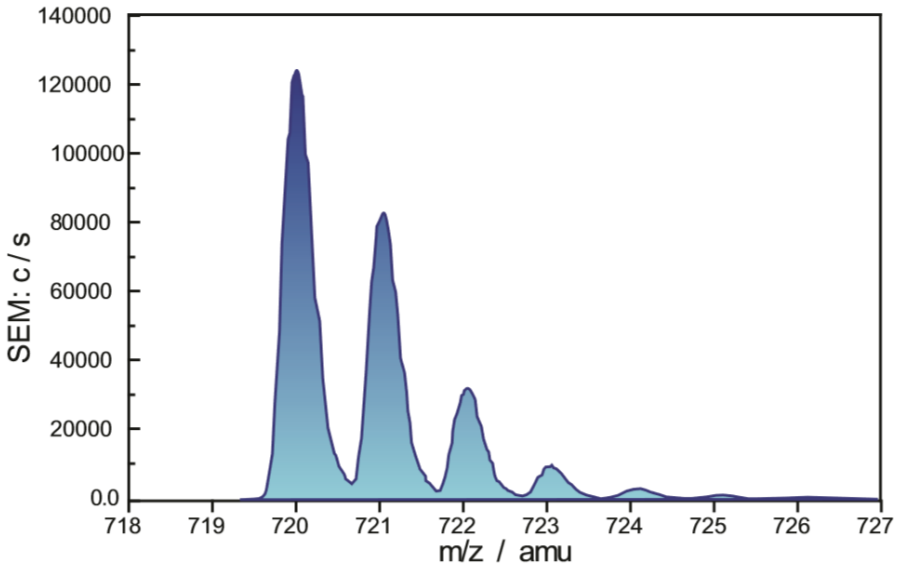


High mass performance of the 3F system, 9mm pole diameter - 1000 amu mass range system. C60 peak at mass 760 with natural abundance carbon isotope peaks at mass 721, 722, 723 and 724....

# EGAsoft – PC software application

EGAsoft – Collect MS data and temperature in the same program.

Includes special features for thermal analysis applications, temperature programmed desorption and evolved gas analysis for example.

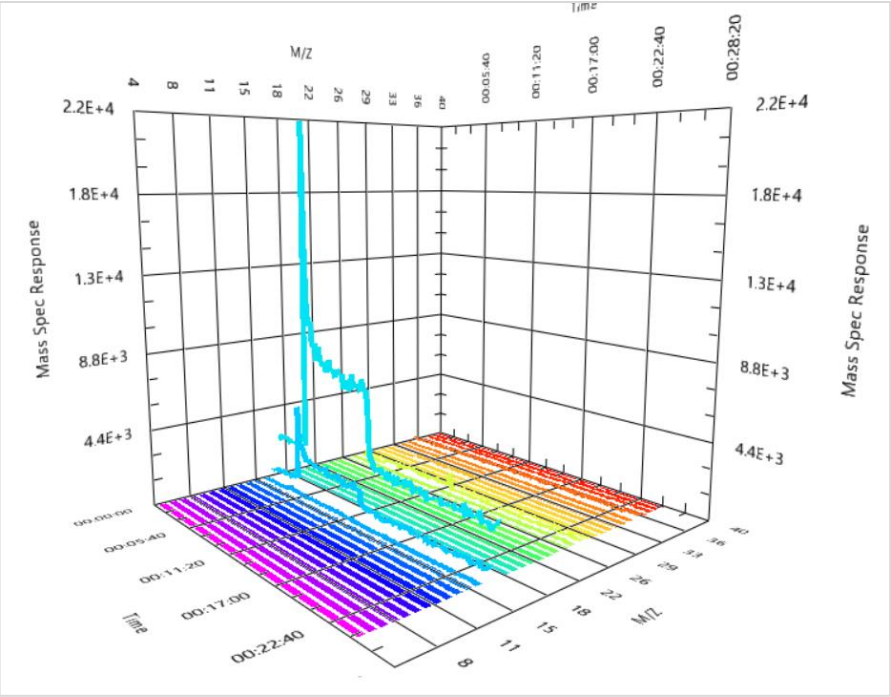


*3D bar data view in EGAsoft*

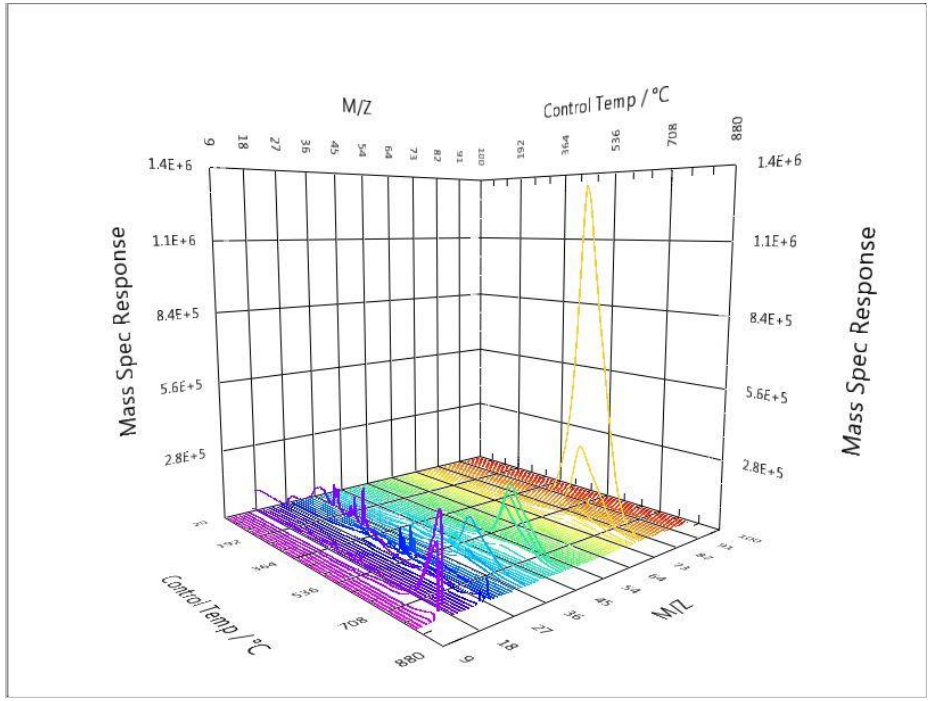


*MS response vs. temperature*

# MASsoft Professional control software

- Template driven quick start operation
- Real time data display
- Mixed mode scanning including trend analysis
- Statistical analysis and peak integration
- Integrated mass spectral library

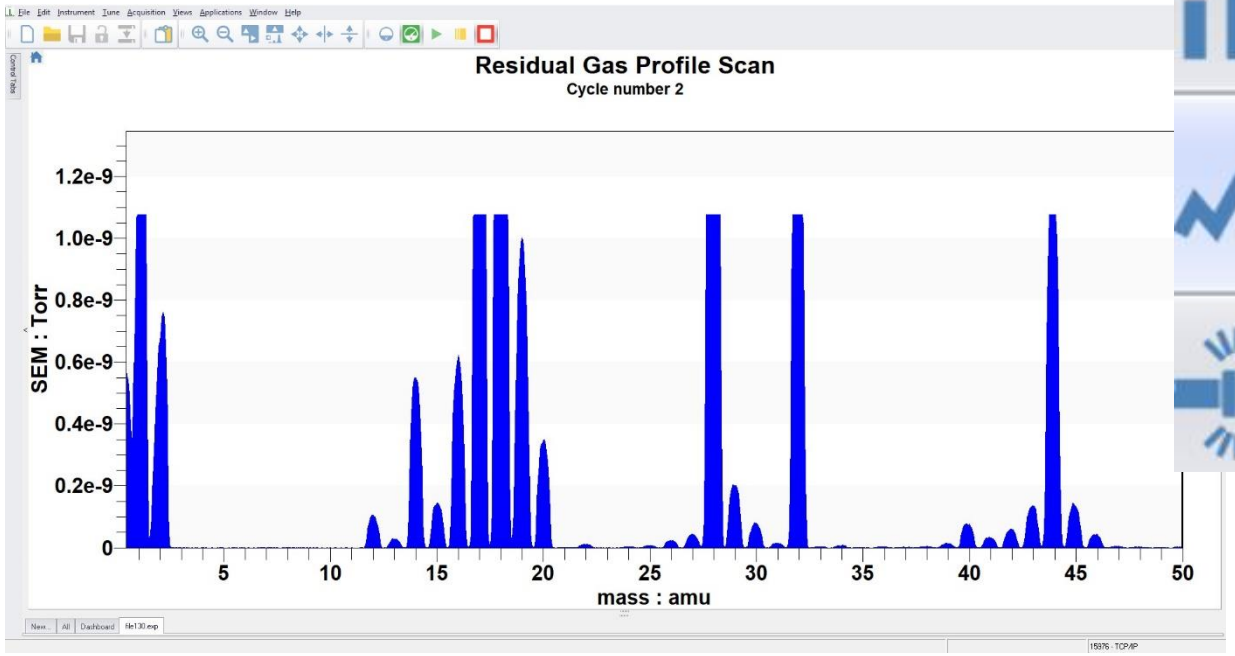


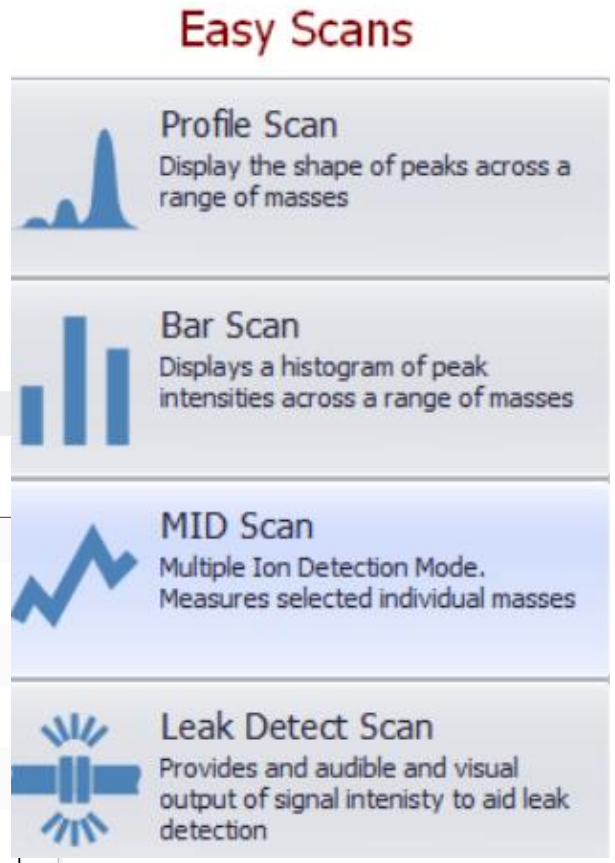

# Summary

- High performance RGA with additional pole bias mid-axis potential and negative ion capability
- Designed and manufactured by Hiden in the UK, completely factory-upgradable and compatible with the Hiden plasma/SIMS series
- Suitable for vacuum fingerprint analysis, leak detection and trend analysis plus UHV surface studies

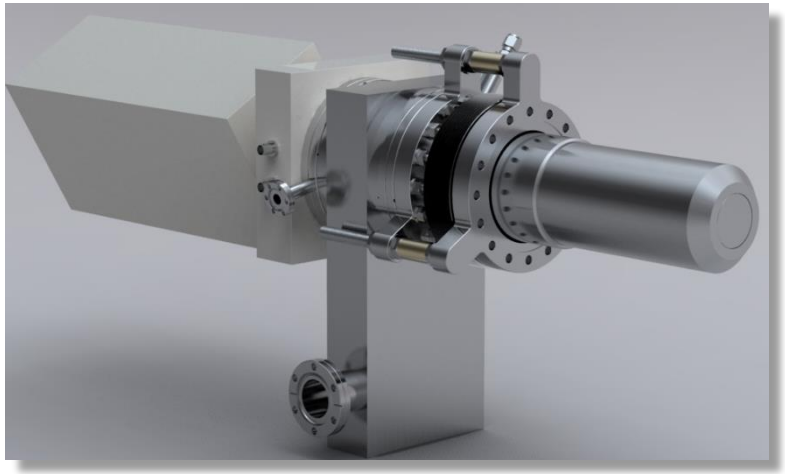

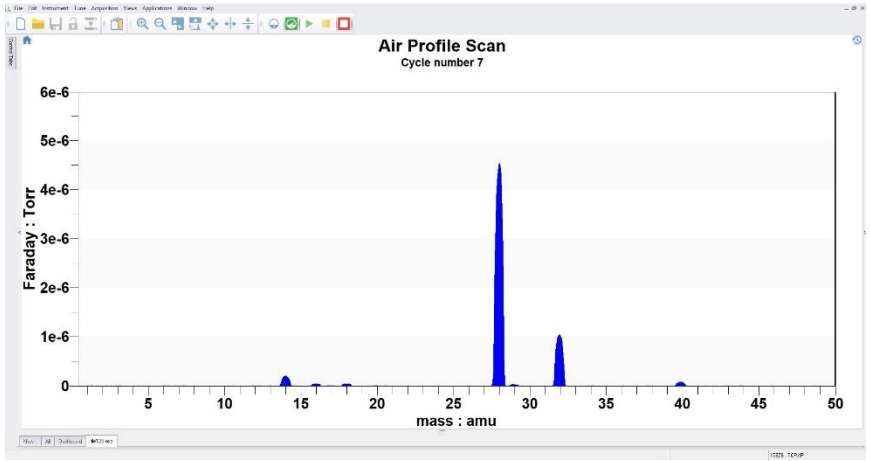

# Hiden Customers include:

- Samsung
- NASA
- Intel Corporation, USA
- CERN
- Carl Zeiss, Germany
- California Institute of Technology
- Brookhaven National Laboratory
- Corning
- CCFE (JET)
- Durham University
- National Physical Laboratory
- Jozef Stephan Institut
- Max Planck Institut
- Bern University
- Rutherford Appleton Laboratory
- SLAC National Accelerator Laboratory
- University of Sao Paulo
- Los Alamos National Lab

- www.HidenAnalytical.com
- The Hiden website is an excellent resource with product pages, brochures, catalogues, product pages with some application notes, presentation and other information.
- Contact +44 1925 445225 for direct support.