www.hidenanalytical.com
info@hiden.co.uk

HIDEN ANALYTICAL

DEMS Cells

Differential Electrochemical Mass Spectrometry

Differential Electrochemical Mass Spectrometry (DEMS)

- Electrochemistry is the interaction between electrical energy and chemical change. Electrochemical cells allow chemical reactions to be manipulated by changing the electrical conditions.
- Development of electrochemical cells is necessary to improve their performance. DEMS is a technique that can be used for mechanistic insight into the chemical reactions that occur at the electrodes.
- Using DEMS, volatile chemical species generated at the electrodes can be detected with very little time delay

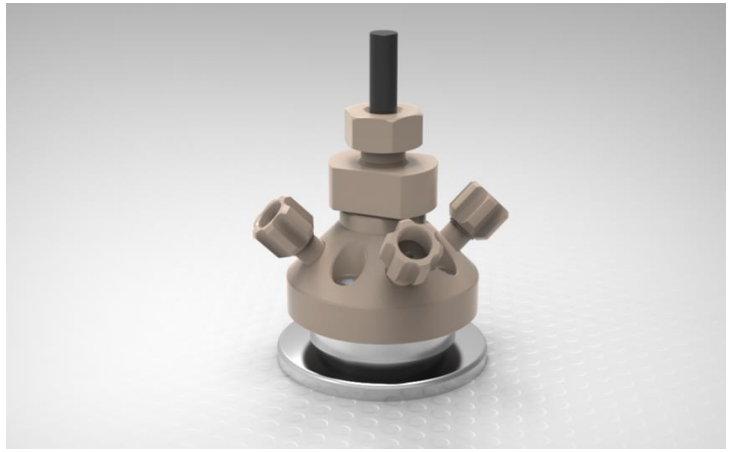

Application Areas

- Fuel Cells
- Li Batteries
- Electrochemical reduction of atmospheric carbon

Introduction to DEMS

- Electricity is used to manipulate a chemical reaction within a cell
- Reaction products are extracted through a membrane. Species are ionised and measured by Mass Spectrometer.
- Changing the electrode materials, electrolytes and current, etc. and getting real time analysis allows the research development of cell improvements.

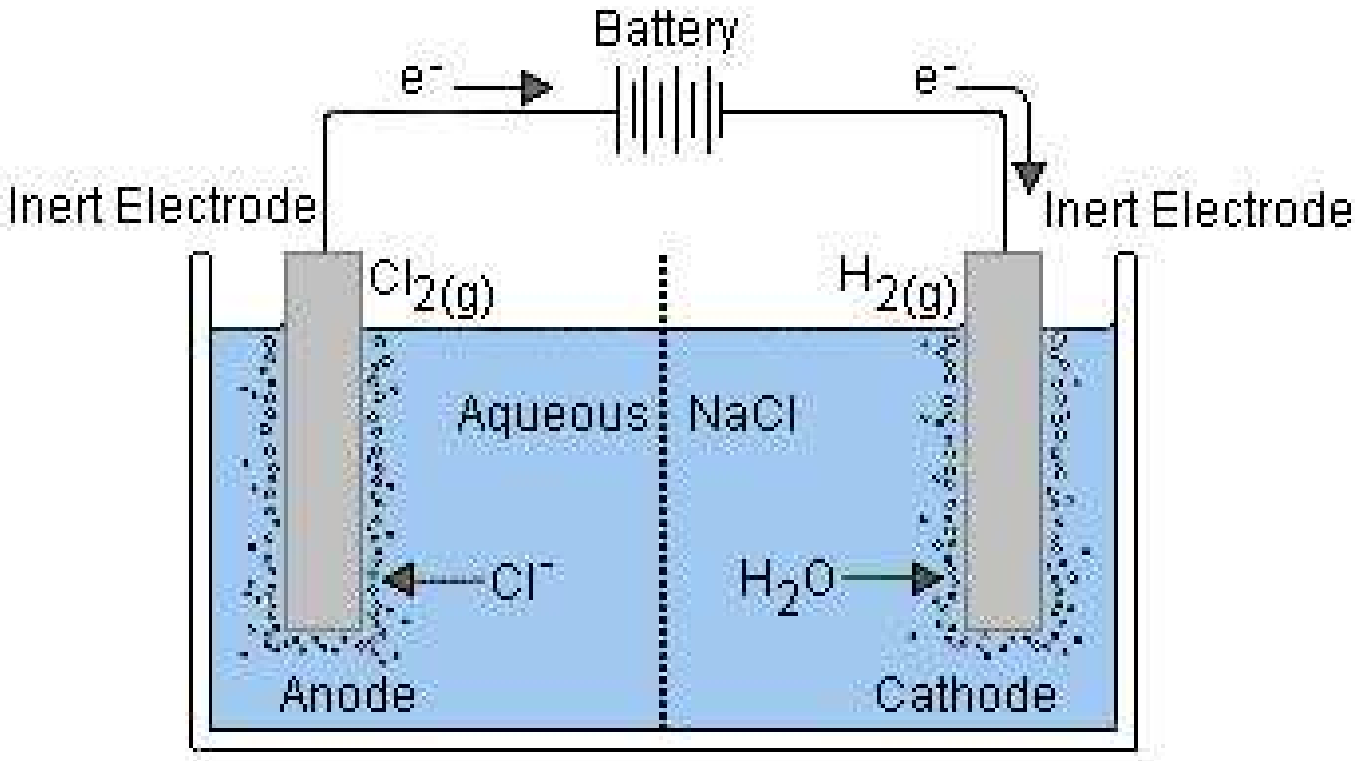

Inverted Electrochemical Cell
(Electrolysis)

Introduction to DEMS

- This is a typical reaction of interest. There is an equilibrium between the forward and reverse reactions, which can be influenced by applying electrical potential.

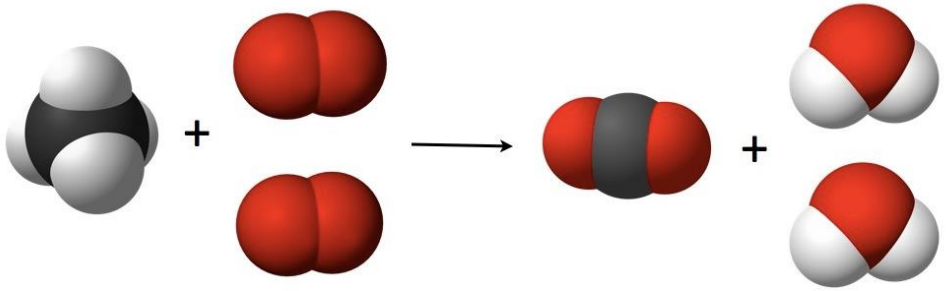

$$CH_4 + 2O_2 \longrightarrow CO_2 + 2H_2O$$

Forward Reaction

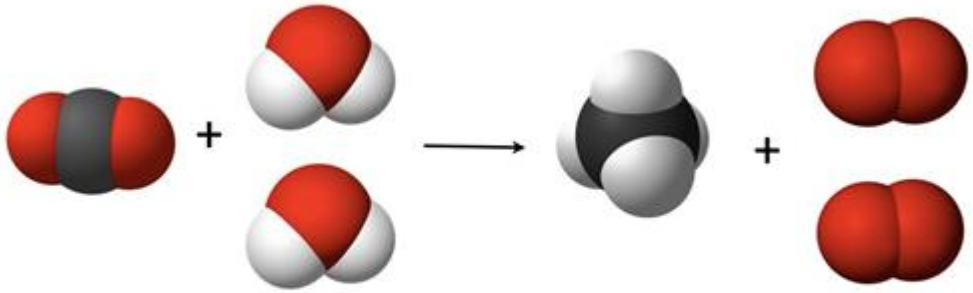

$$CO_2 + 2H_2O \longrightarrow CH_4 + 2O_2$$

Reverse Reaction

Examples of Electrochemical Reduction Products from CO_2

To produce useful products from the reduction of CO_2 an electrochemical reaction can be utilised.

$CO_2 + 2\,H^+ + 2\,e^- \rightarrow HCO_2H$	$E^0 = -0.61$ V
$CO_2 + 4\,H^+ + 4\,e^- \rightarrow HCHO + H_2O$	$E^0 = -0.48$ V
$CO_2 + 6\,H^+ + 6\,e^- \rightarrow CH_3OH + H_2O$	$E^0 = -0.38$ V
$CO_2 + 8\,H^+ + 8\,e^- \rightarrow CH_4 + 2\,H_2O$	$E^0 = -0.24$ V
$CO_2 + e^- \rightarrow CO_2^-$	$E^0 = -1.90$ V

Product distribution depends on supplied voltage

DEMS -
Differential Electrochemical Mass Spectrometry:

Scan the (electrochemical) potential and apply Mass Spectrometry to analyse the products

- typical scanning speeds are around 1 mV/s

- typical scanning range of 0 to -1.5 V for CO_2 Reduction

Hiden DEMS cell types

A. Single thin layer flow cell
B. Dual thin layer flow cell

Product Distribution vs Scanned Potential in CO_2 Reduction

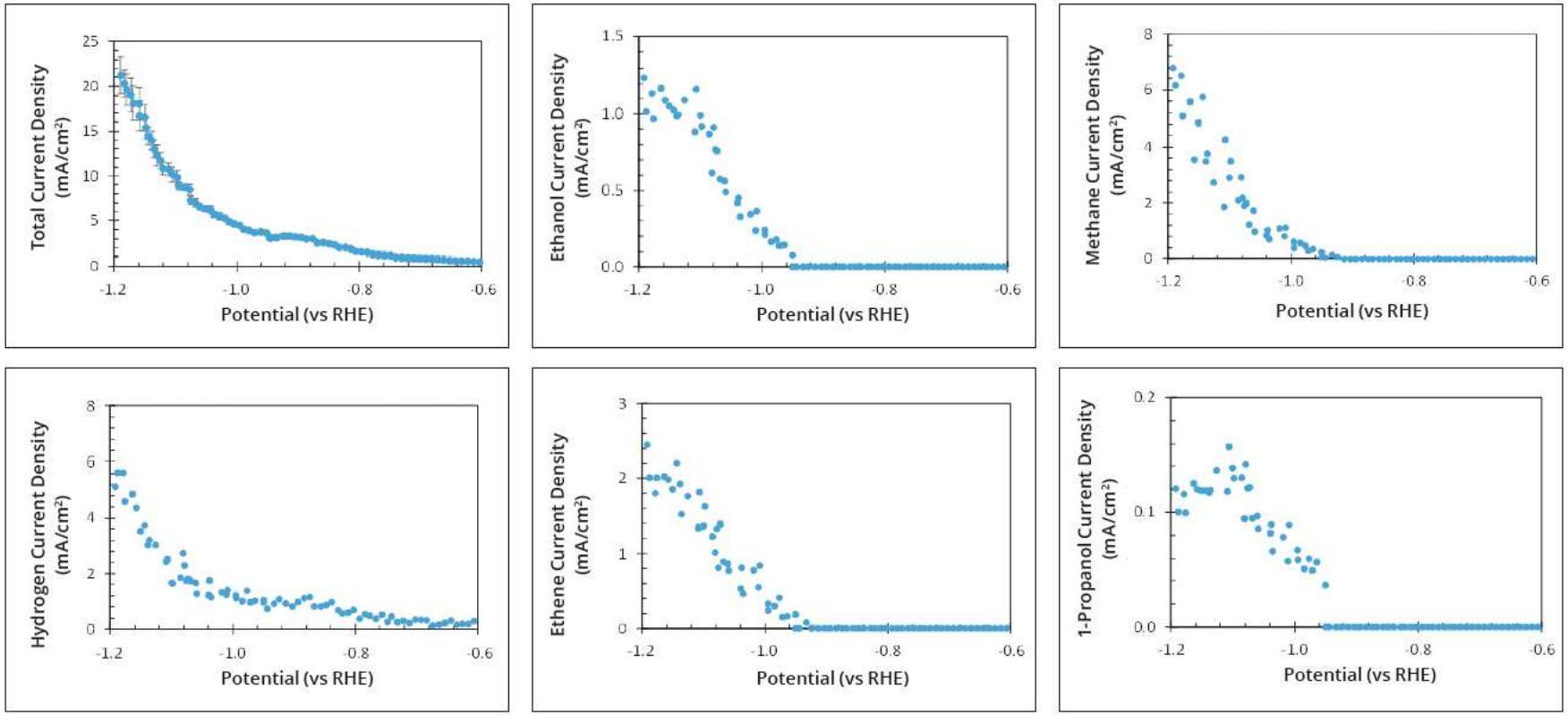

DEMS results obtained for CO_2-sparged 0.05 M K_2CO_3 electrolyte (pH = 6.8) with an electrolyte flow rate of 1 mL/min and a scan rate of 0.2 mV/s. Further details are included in the ACS publication. E. L. Clark, M. R. Singh, Y. Kwon, and A. T. Bell (2015) 'Differential Electrochemical Mass Spectrometer Cell Design for Online Quantification of Products Produced during Electrochemical Reduction of CO_2' Anal. Chem., 87 (15), 8013–8020.

Hiden HPR-40 DEMS system

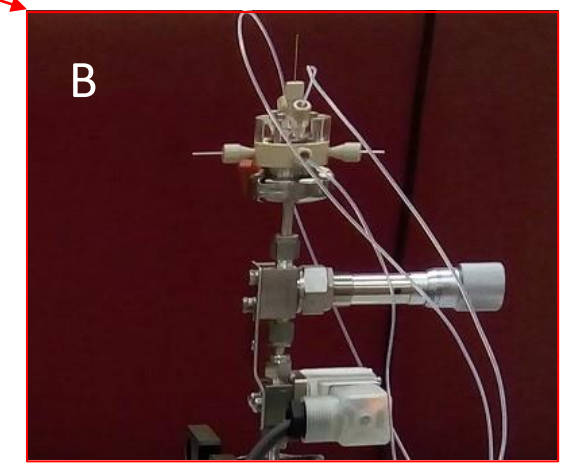

- Complete System including Mass spectrometer and electrochemical half cell
- Brings the speed and response of Mass Spectrometry to electrochemical research
- Standard KF fittings allows User designed cells to be connected

The Hiden DEMS System - Schematic

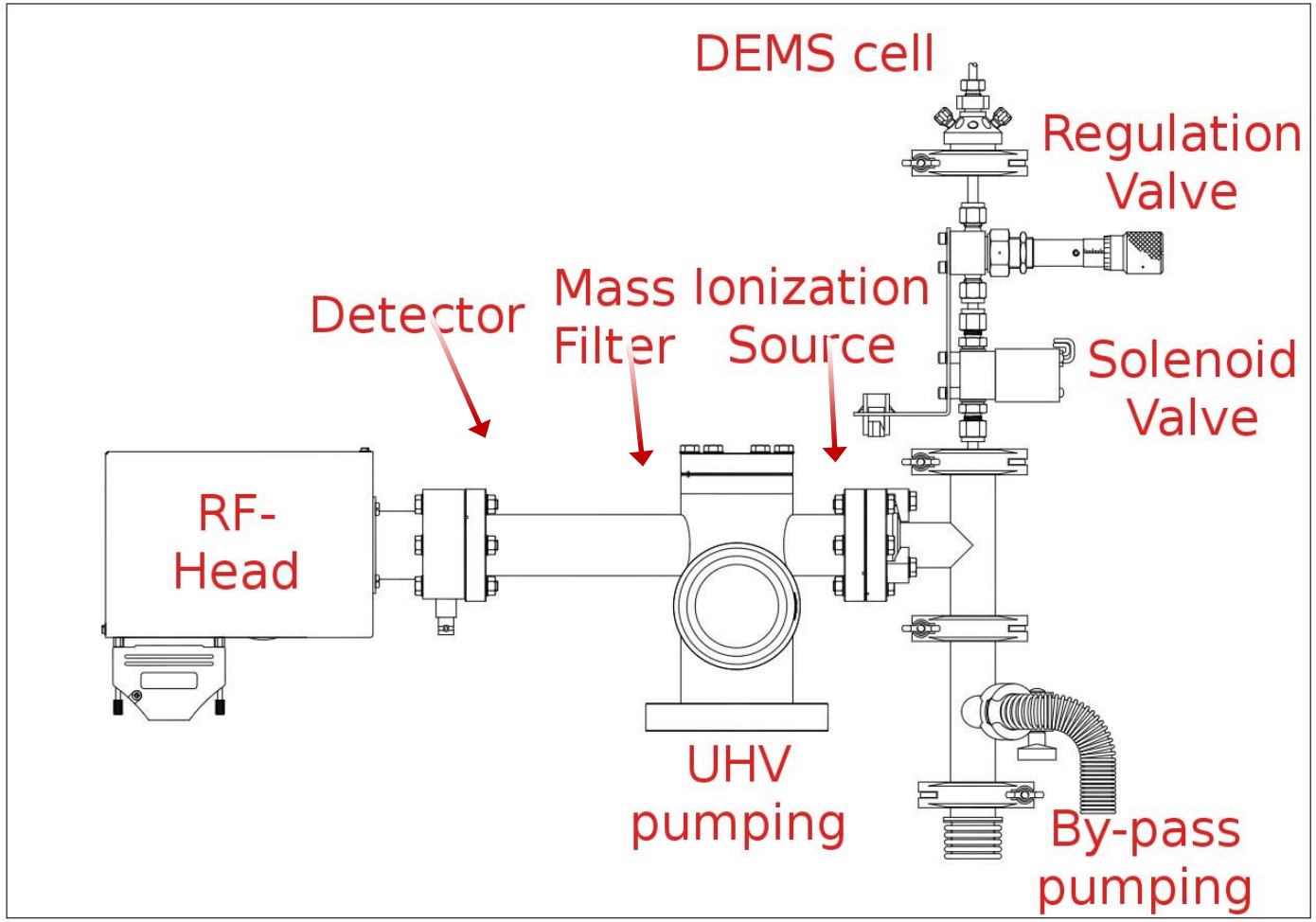

The Hiden DEMS System - Drawing

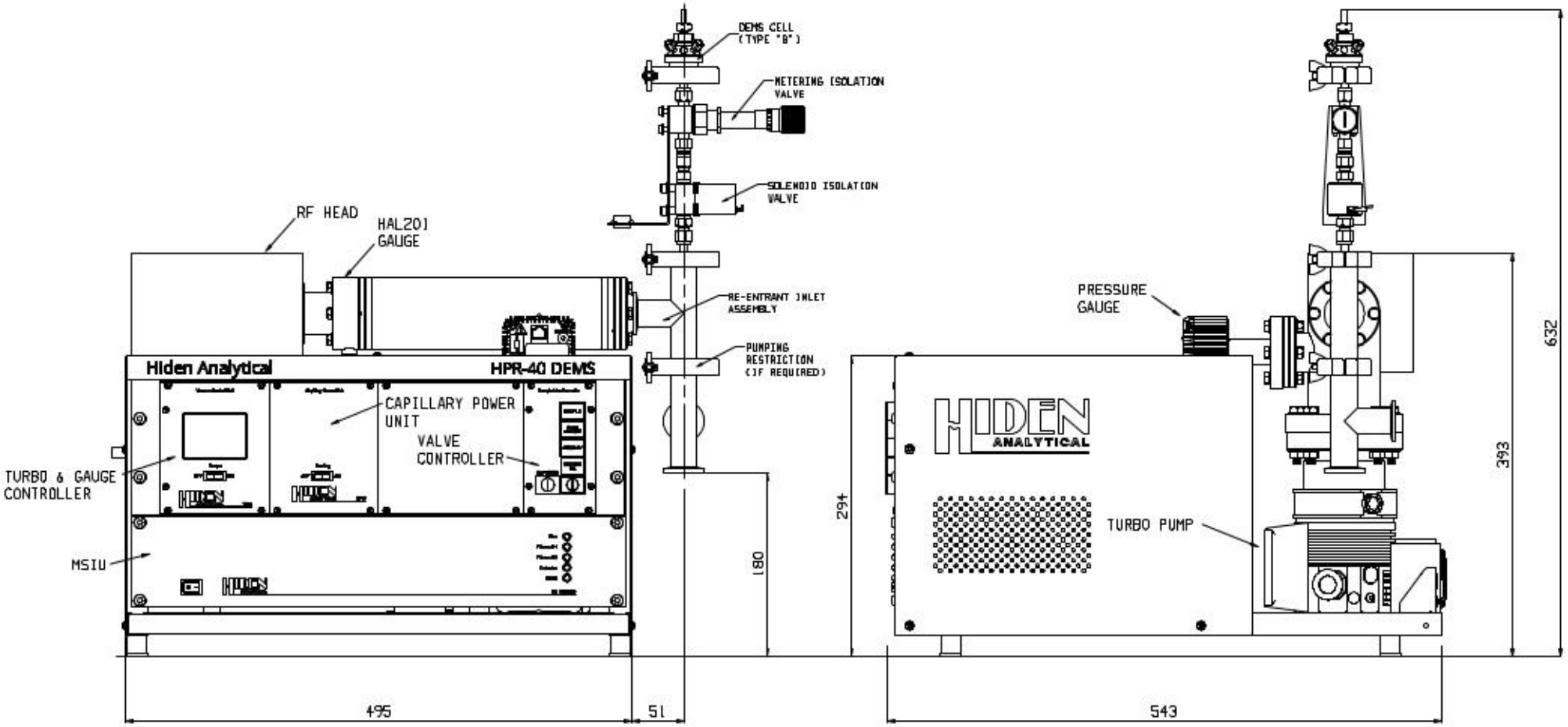

DEMS Cell Options

1. Type A - Single thin layer DEMS cell

2. Type B - Dual thin layer DEMS cell

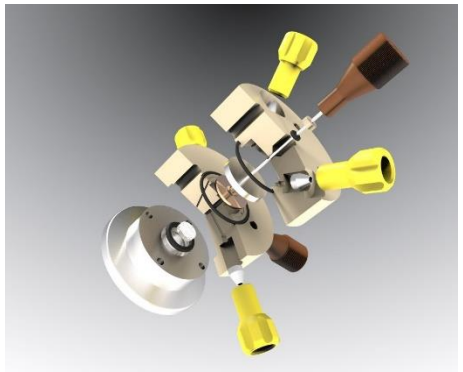

3. DEMS probe for remote analysis

Type A. Single thin layer flow DEMS cell by Hiden

Type A DEMS cell for materials/catalysis studies

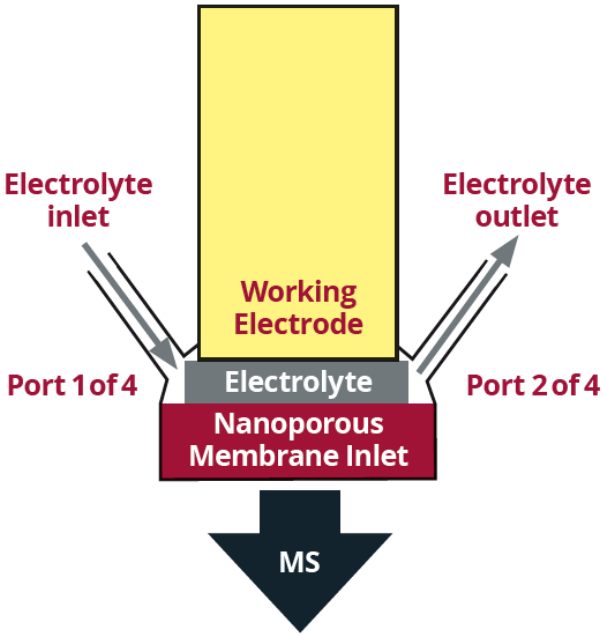

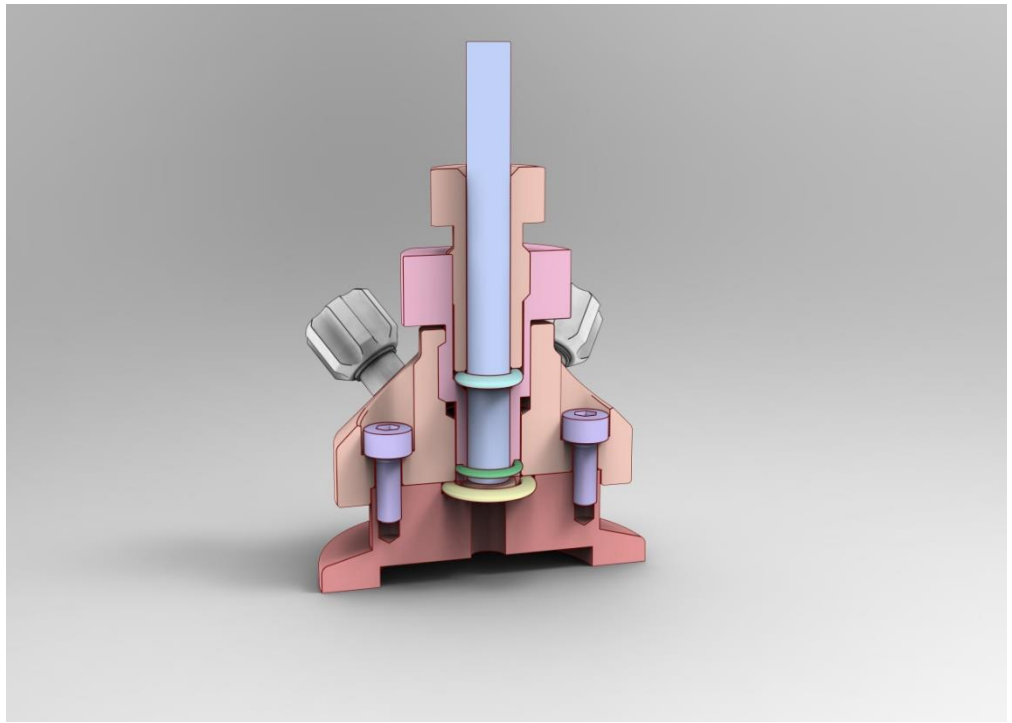

- Simple design
- Large surface area electrodes

The thin-layer cell is an ideal approach to the study of a variety of working electrodes under static electrolyte conditions such as stripping or desorption measurements.

Type B: Dual layer flow DEMS cell - Schematic

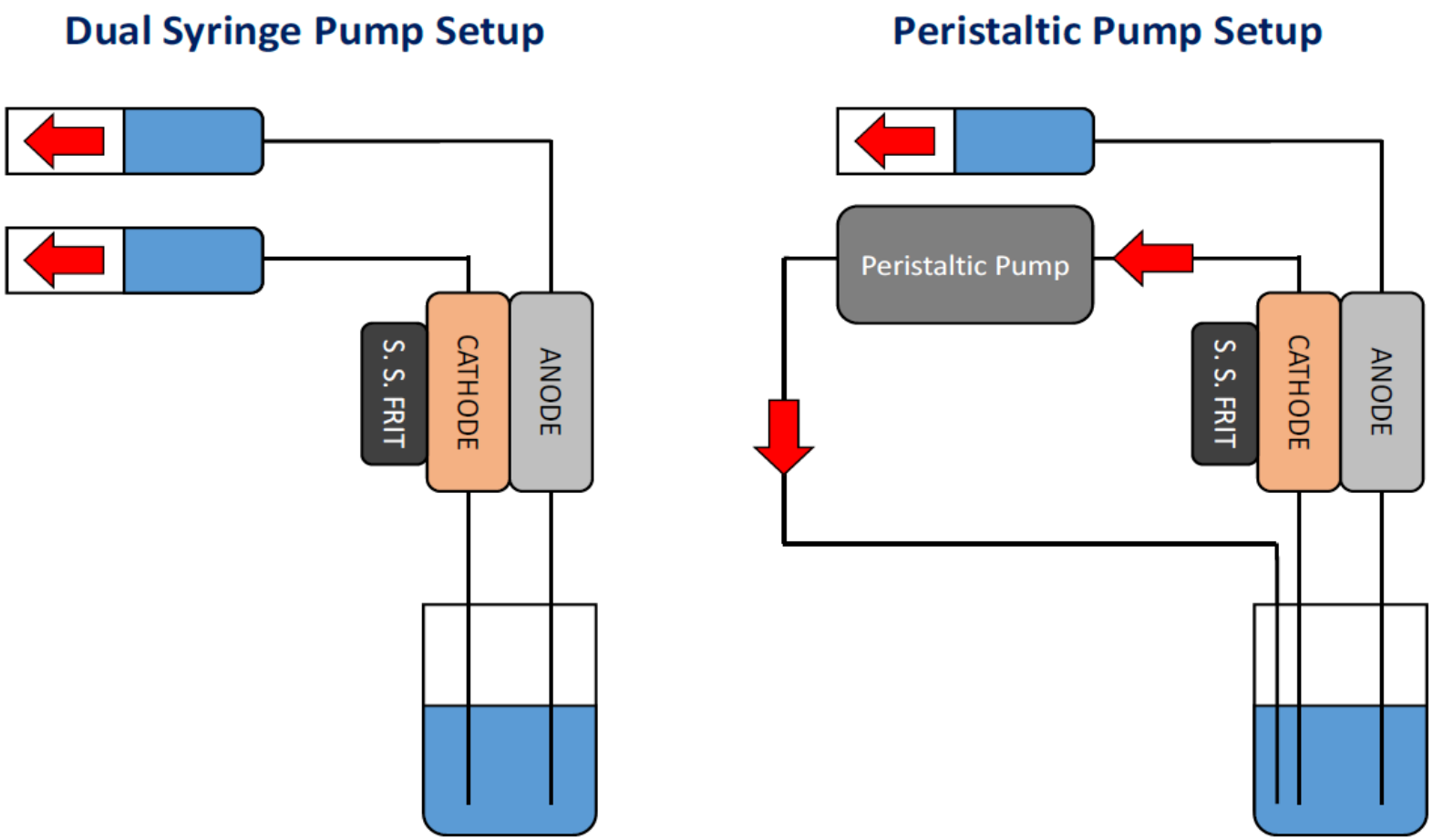

Type B: Schematic dual layer flow DEMS cell

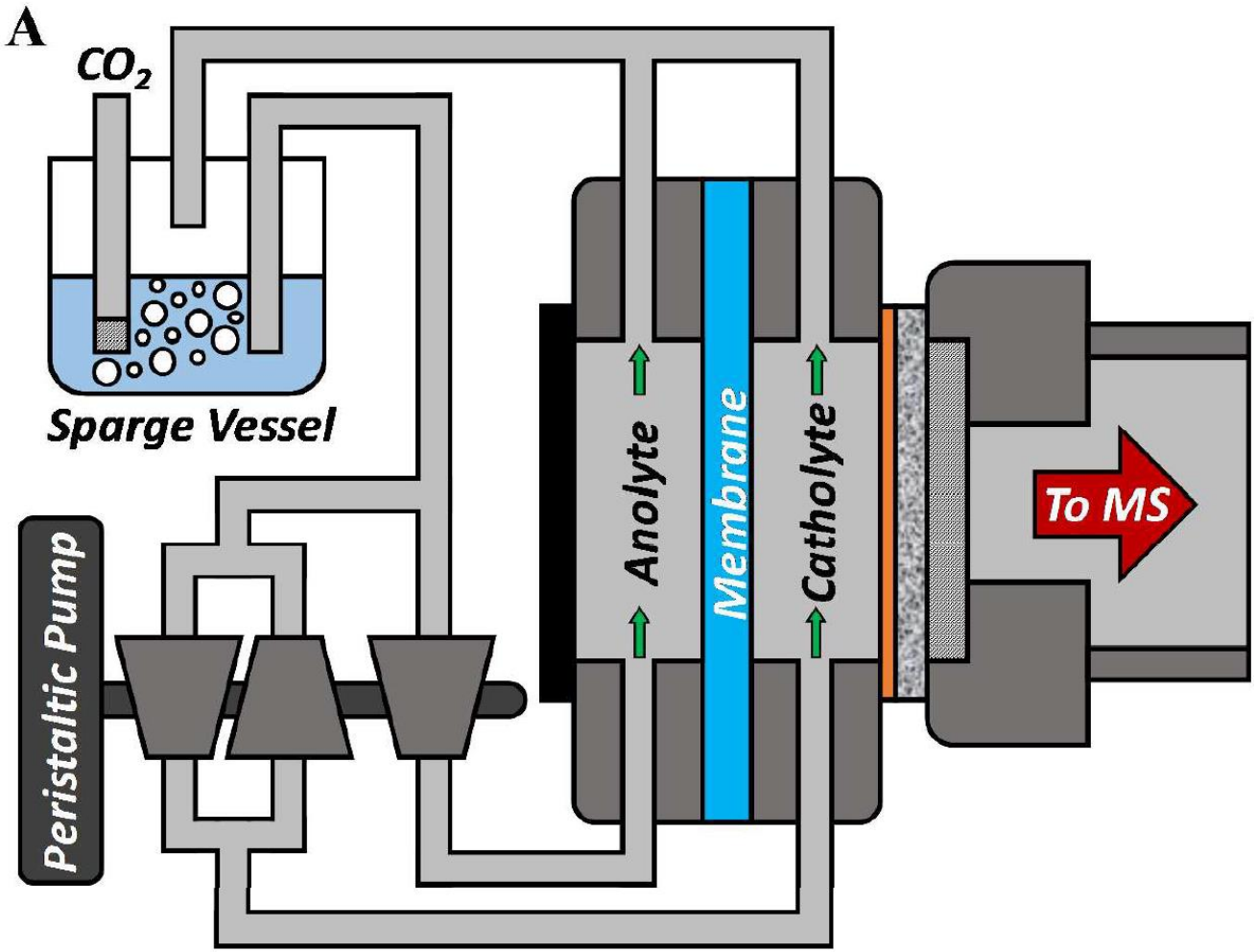

Type B. Dual thin layer flow cell

Type B DEMS cell for electrochemical reaction studies

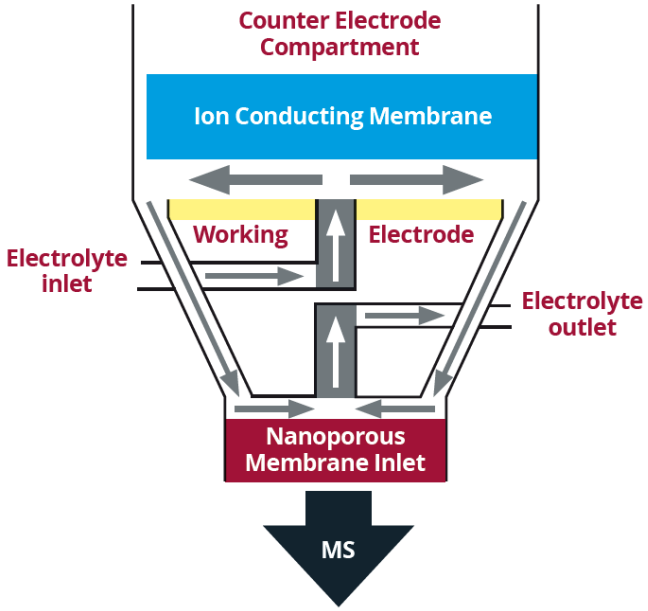

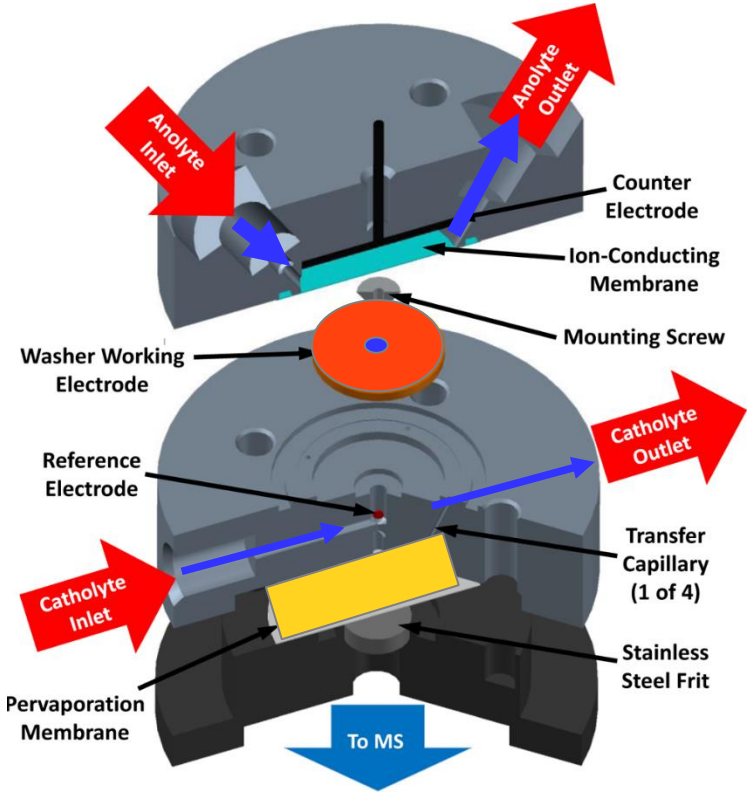

Working Electrode
Electrolyte Flow
Membrane

Designed by Bell et al.
Univ California Berkeley

Advantages of dual thin layer flow cell:

- good collection efficiency
- favourable electrode configuration

The dual-thin layer cell design is better suited to the monitoring of continuous faradic reactions, with controlled hydrodynamics in the determination of reaction product formation rates and turn over frequencies.

Type B. Dual thin layer flow cell - design features

Working Electrode
Electrolyte Flow
Membrane

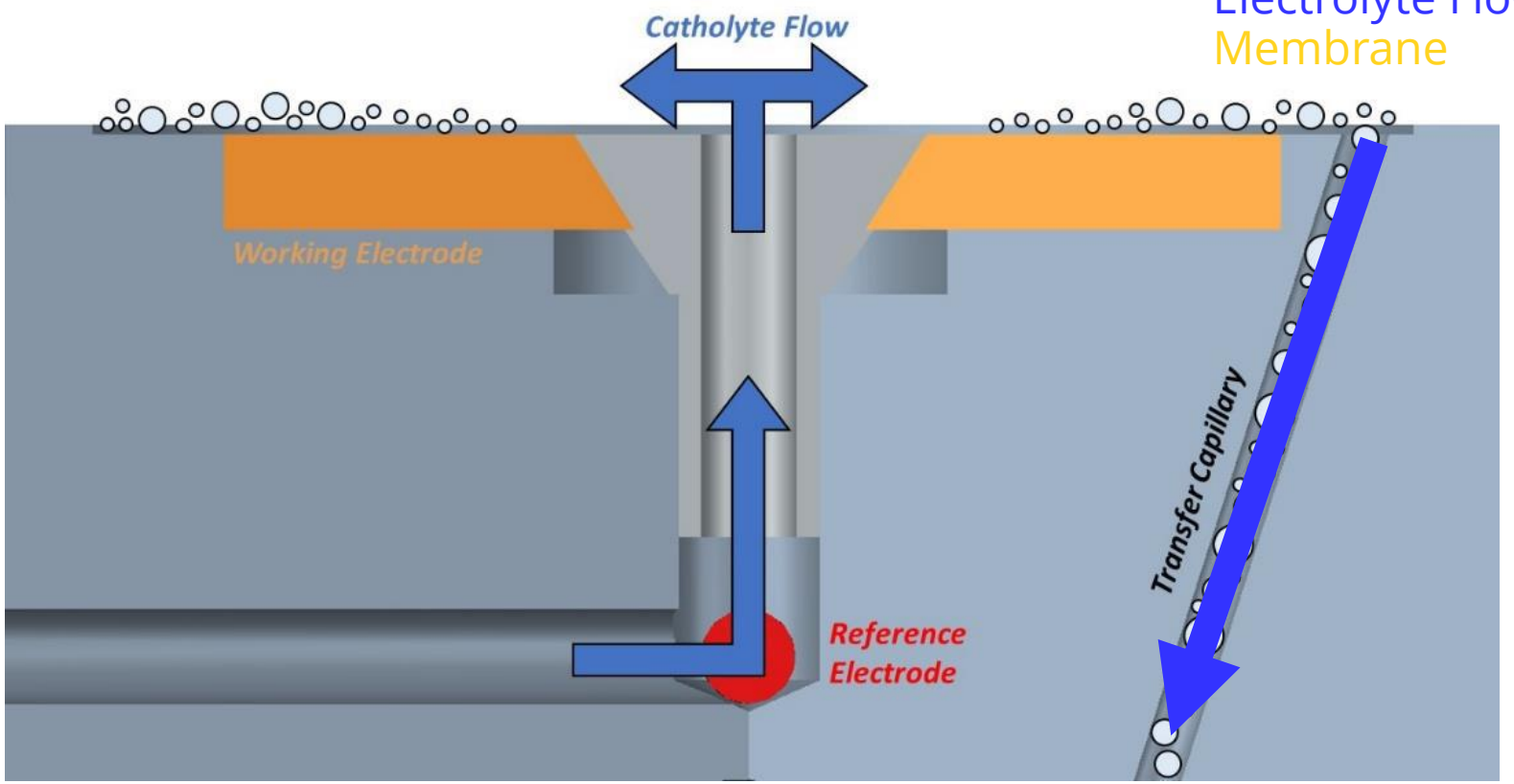

- Continuous removal of reactant products from the working electrode
- Minimises depletion of reactants at working electrode

Summary - Design

Type A. Thin layer flow cell:

+ good collection efficiency

- reactant depletion

The thin-layer cell is an ideal approach to the study of a variety of technical working electrodes under static electrolyte conditions such as stripping or desorption measurements.

Type B. Dual thin layer flow cell:

+ good collection efficiency
+ favourable electrode configuration

The dual-thin layer cell design is better suited to the monitoring of continuous faradic reactions, with controlled hydrodynamics in the determination of reaction product formation rates and turn over frequencies.

DEMS provides a powerful tool for *online* analysis of reactants from electrochemical reactions

Additional Evolved Gas Sampling Options

- QIC Inlet – heated capillary inlet for sampling gas at 100 mbar to 2 bar pressure
    - High/low pressure options available
    - High temperature inlets available

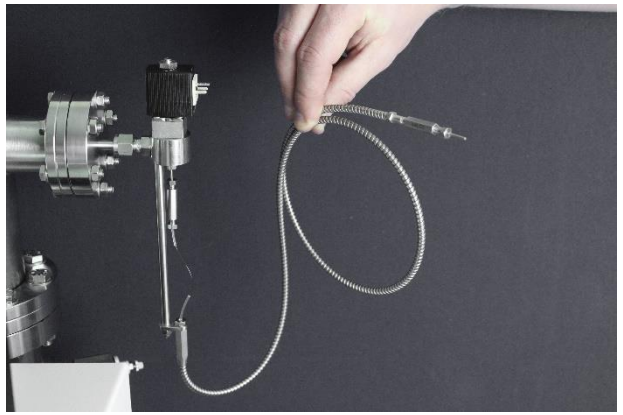

- Microflow inlet – for gas analysis of limited flow

- Dissolved species probes
- Flow through type
- Probe type
- Cuvette cell
- Enzyme kinetics probe

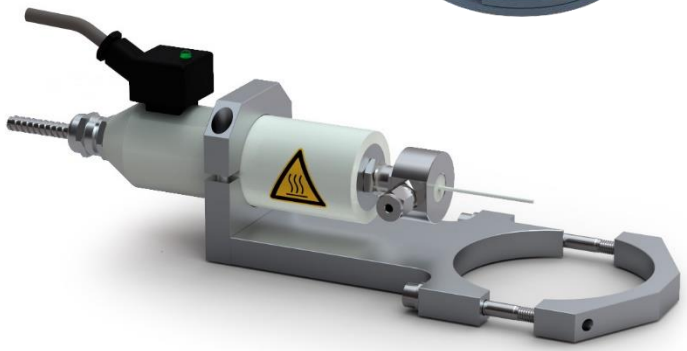

Application Data

- UC Berkeley publication

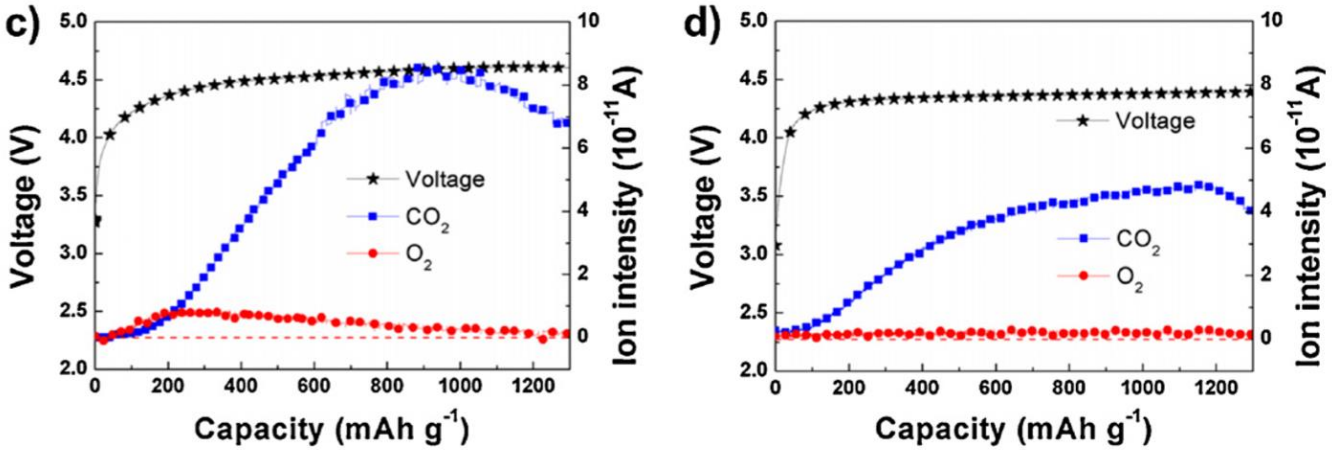

Fig. 6. (a) Comparison of the charge GITT voltage profiles with and without a catalyst obtained from Li–O_2 cells. (b) FT-IR measurement of electrolytes collected at the end of one cycle. Gas evolution results of Li–O_2 cells (c) without a catalyst and (d) with a catalyst while charging as measured by DEMS.

K. Kang et al., *Mechanism of Co_3O_4/graphene catalytic activity in Li-O_2 batteries using carbonate based electrolytes*, Electrochimica Acta **2013**, 63-70.

Academic References

- A DEMS Study of the Reduction of CO_2, CO, and HCHO Pre-Adsorbed on Cu Electrodes: Empirical Inferences on the CO_2RR Mechanism. Alnald Javier, Brian Chmielowiec, Jean Sanabria-Chinchilla, Manuel P. Soriaga, *Electrocatalysis*. 6, (2) 127-131.
- A lithium-oxygen battery based on lithium superoxide, Jun Lu, Yun Jung Lee, Xiangyi Luo, Kah Chun Lau, Mohammad Asadi, Hsien-Hau Wang, Scott Brombosz, Jianguo Wen, Dengyun Zhai, Zonghai Chen, Dean J. Miller, Yo Sub Jeong, Jin-Bum Park, Zhigang Zak Fang, Bijandra Kumar, Amin Salehi-Khojin, Yang-Kook Sun, Larry A. Curtiss & Khalil Amine, *Nature* 2016 **529** (7587) 377-382.
- Cathode Based on Molybdenum Disulfide Nanoflakes for Lithium–Oxygen Batteries, Mohammad Asadi, Bijandra Kumar, Cong Liu, Patrick Phillips, Poya Yasaei, Amirhossein Behranginia†, Peter Zapol, Robert F. Klie, Larry A. Curtiss, and Amin Salehi-Khojin, *ACS Nano 2016*, **10** (2) 2167-2175.
- Differential Electrochemical Mass Spectrometer Cell Design for Online Quantification of Products Produced during Electrochemical Reduction of CO_2, Ezra L. Clark, Meenesh R. Singh, Youngkook Kwon, Alexis T. Bell, *Anal. Chem.* 2015 **87** (15) 13-20.

- www.HidenAnalytical.com
- The Hiden website is an excellent resource with product pages, brochures, catalogues, product pages with some application notes, presentation and other information.
- Contact +44 1925 445225 for direct support.