HIDEN ANALYTICAL

QGA Quantitative Gas Analyser

A compact bench-top system for real-time gas and vapour analysis

Detailed product information / introduction

A compact bench-top gas analyser configured for real-time, multi-species analysis with wide dynamic range – 100 ppb to 100%

Applications:

- gas reaction studies
- catalysis
- reaction kinetics
- TPD/TPR/TPO
- thermal analysis mass spectrometry
- gas purity analysis/contamination studies
- process characterisation
- fermentation off-gas analysis
- environmental gas analysis
- combustion studies
- CVD/MOCVD

Key Features

- multiple gas and vapour analysis – 200 amu mass range, 300 amu option
- 2 metre continuous sampling heated capillary inlet
- gas sample flow rate 16 atm. cc/min standard. 1 atm. cc/min option
- high sensitivity: detection to 100 ppb
- <300 ms response time to changes in gas concentration
- fast data acquisition: up to 650 measurements per second
- integrated CO analyser option for the analysis of low level CO in the presence of N_2 and CO_2
- soft ionisation for reduced spectral fragmentation and simplified data interpretation
- broad range of sampling accessories
- custom designed interfaces available to suit a wide range of TGA instruments for evolved gas analysis

TGA-MS Inlet

Software

QGA Professional main screen

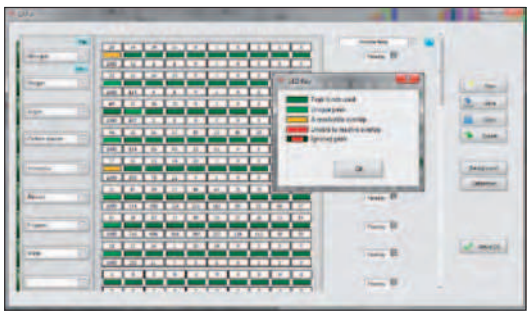

Automatic mass spectral analysis setup

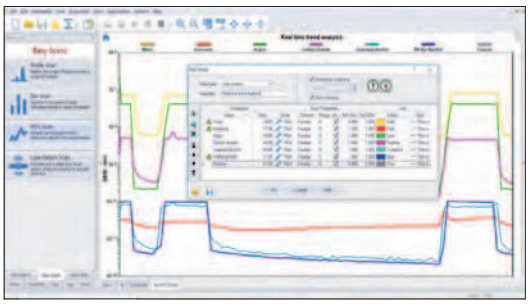

MASsoft Professional – overview

Trend analysis (MID setup)

QGA Professional

An application specific software package for quantitative gas and vapour analysis providing real-time continuous analysis of up to 32 species with concentrations measured in the range 0.1 ppm to 100%.

Key Features – QGA Professional Software

- automatic calibration with background correction
- automatic subtraction of spectral overlaps
- quantitative analysis of up to 32 gases
- 10 peak spectral library with intelligent library scan feature
- automatic triggering of analysis from an external input
- x-axis can display time or an external input, e.g. temperature

MASsoft Professional

A multi-level software package allowing both simple control of mass spectrometer parameters and complex manipulation of data plus control of external devices.

Key Features – MASsoft Professional Software

- profile, bar and multiple ion detection (MID) modes
- mass spectrometer ionisation energy control for soft ionisation of complex mixtures
- export data to NIST MS database for analysis of unknowns
- export to external data analysis software, e.g. Excel, Origin
- control of external devices e.g. MFCs, gas switching/sampling valves and furnace PID controllers
- output data as percentage or ppm values
- real-time subtraction of overlapping peaks
- scan templates for fast setup of scans
- user selected alarm facilities

Technical Data

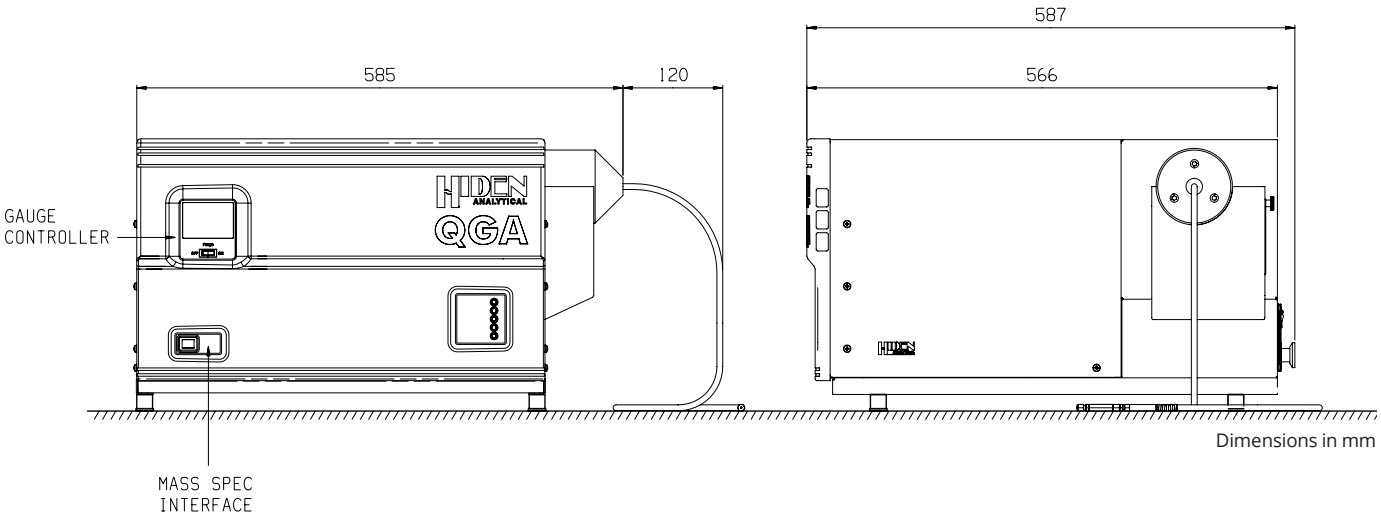

Dimensions in mm

Mass ranges, amu:	1-200 / 1-300 amu
Sensitivity:	100% to 100 ppb subject to spectral interference
Speed:	Maximum measurement speed is 650 measurements/second
Response time:	300 ms
Software:	MASsoft Professional & QGA Professional
	Windows 7/8/10 compatible
Dimensions (L x W x H), mm:	585 x 566 x 318 mm
Weight, kg:	40 kg and external scroll pump 23 kg
Power requirement:	110/220/240, 50/60Hz 0.6 KVA & external scroll pump 0.3 KVA
Interface:	Ethernet/USB/serial (RS-232) connections
Gas consumption rate:	16/8/3.2/0.8 sccm (user configurable)
Capillary operating temperature, °C:	up to 200 standard/300/350/400/450 options
Detector:	Dual Faraday/Channeltron Electron Multiplier
Analogue input:	8x (optional)/16 bit
Analogue output:	16x (optional)/14 bit
Digital input:	8x
Digital output:	8x, 24V

System Configuration & Options

ITEM	DESCRIPTION	PARTCODE
SYSTEM	QGA bench-top gas analysis system, including Hiden HAL 201 RC mass spectrometer with Faraday Multiplier detector. Mass range 200 amu. Includes external scroll pump. QGA Professional & MASsoft Professional included as standard. Includes standard QIC capillary inlet for operation up to 200°C	305110
OPTIONS & ACCESSORIES	Extended mass range. 300 amu mass range (in place of standard 200 amu mass range)	305113
	Corrosion resistant upgrade	303604
	CO Analyser 0 - 10.000 ppm range	303595
SPARES KIT	QIC heated capillary inlet filter (2 µm)	303576
	Recommended spares kit ▸ Replacement capillary liner ▸ Replacement Platinum leak orifice ▸ Twin filament	303147
GAS INLET OPTIONS	QIC HT 250 high temperature capillary inlet - 250°C	303561
	QIC HT 450 very high temperature capillary inlet - 450°C	303568
	LP-SSC Low pressure capillary - 25 mbar to 250 mbar	303564
	VLP-GLC very low pressure sampling capillary - 1 mbar to 10 mbar	303558
	QIC inlet adapters for TA-MS - Custom designed interfaces to suit a broad range of TGA instruments for evolved gas analysis	303580-585
MULTI-STREAM SELECTOR MANIFOLDS	MSV 8-way multi-stream valve	303688
	20-way Proteus multi-stream valve	303650
	40-way Proteus multi-stream valve	303660
	80-way Proteus multi-stream valve	303670
SOFTWARE OPTIONS	EGAsoft - application specific software program for evolved gas analysis, TA-MS and TPD studies	800295

QGA - bench-top gas analyser

QGA - external scroll pump

Hiden**APPLICATIONS**

Hiden's quadrupole mass spectrometer systems address a broad application range in:

GAS ANALYSIS

- dynamic measurement of reaction gas streams
- catalysis and thermal analysis
- molecular beam studies
- dissolved species probes
- fermentation, environmental and ecological studies

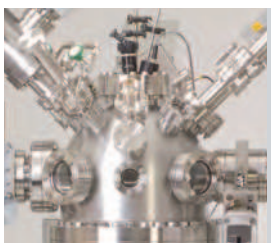

SURFACE ANALYSIS

- UHV TPD
- SIMS
- end point detection in ion beam etch
- elemental imaging – 3D mapping

PLASMA DIAGNOSTICS

- plasma source characterisation
- etch and deposition process reaction kinetic studies
- analysis of neutral and radical species

VACUUM ANALYSIS

- partial pressure measurement and control of process gases
- reactive sputter process control
- vacuum diagnostics
- vacuum coating process monitoring

HIDEN ANALYTICAL

Hiden Analytical Ltd.
420 Europa Boulevard
Warrington WA5 7UN England

T **+44 [0] 1925 445 225**
F **+44 [0] 1925 416 518**
E **info@hiden.co.uk**
W **www.HidenAnalytical.com**

Sales Offices:

We have sales offices situated around the globe. **Visit our website for further information.**