Hiden QIC BioStream

for

Fermentation off gas analysis

Introduction

- This presentation provides an overview of gas analysis systems for fermentation off gas analysis.

- Fermentation off gas analysis by mass spectrometry provides real time trend analysis of the gases and vapour species that are important to product yield, O_2 CO_2 H_2 CH_4 for example, and provides vital data for real time process monitoring.

- The mass spectrometer is user programmable to analyse a broad range of gas and vapour species and covers most species of interest in both aerobic and anaerobic applications.

- The QIC series gas analysers manufactured by Hiden Analytical include systems configured to address the application of fermentation off gas analysis.

Hiden QIC Series Gas Analysis Systems

- The QIC series gas analysers are mass spectrometers configured for real time gas analysis, fermentation off gas for example.

- The QIC systems provide for multiple species real time trend analysis providing quantitative gas analysis.

- The QIC systems include an inert silica capillary with fast response to both gases and vapours.

QGA A single stream real time gas analyser

Q/C Inlet Technology

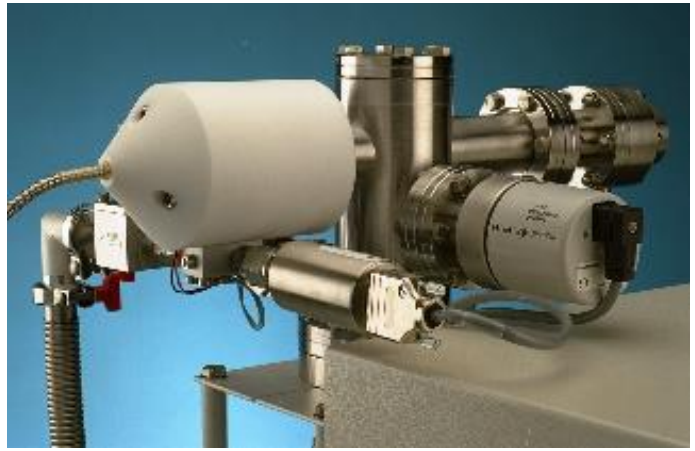

Quartz and Platinum Wetted Surfaces	→	No memory effects
Heated Capillary	→	No condensation effects
Flow Matched	→	Optimum response / recovery
Minimal Internal Volume	→	PPB detection

These features provide excellent analyser performance for fermentation off gas analysis

Q/C Inlet- MS Interface Overview

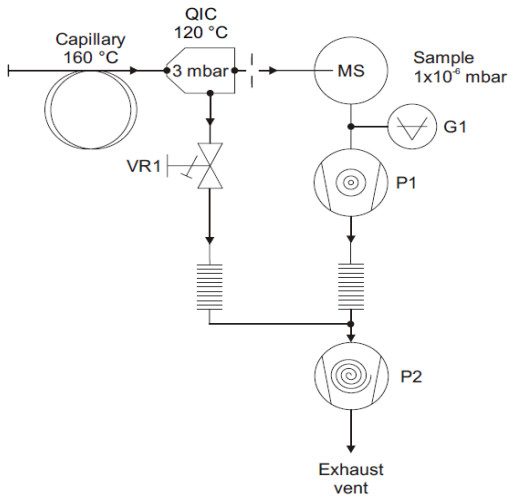

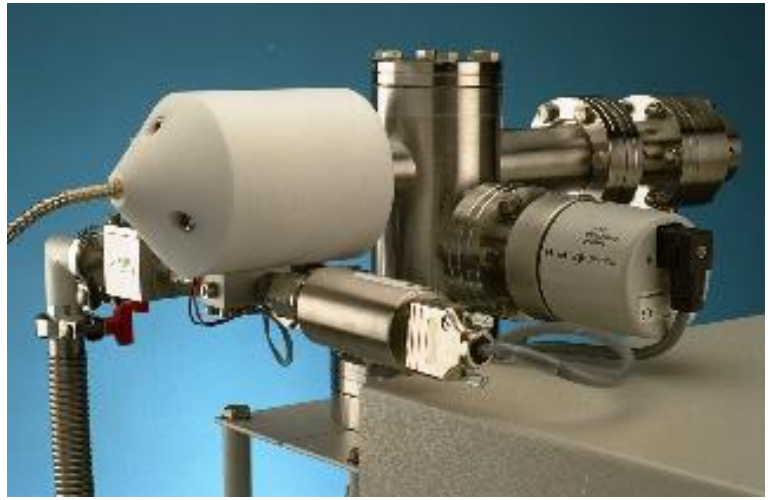

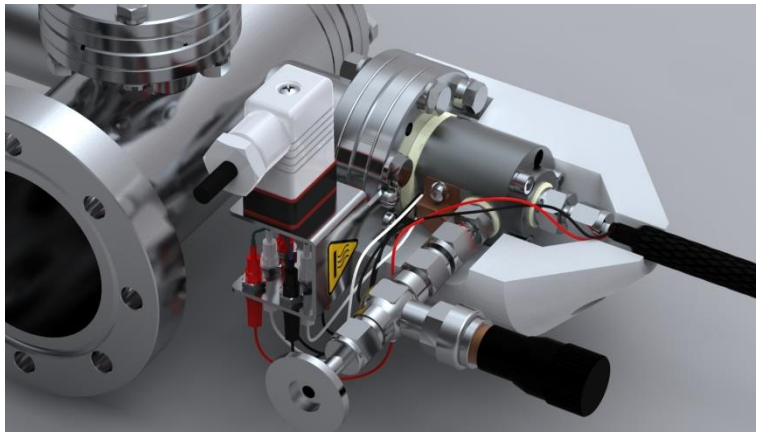

Key
G1 Penning gauge
VR1 QIC Inlet bypass control valve
P1 60 l/s turbo drag pump
P2 Backing and bypass Scroll pump
MS UHV Housing (Mass spectrometer chamber)

Fast Response to Permanent Gases / Vapours

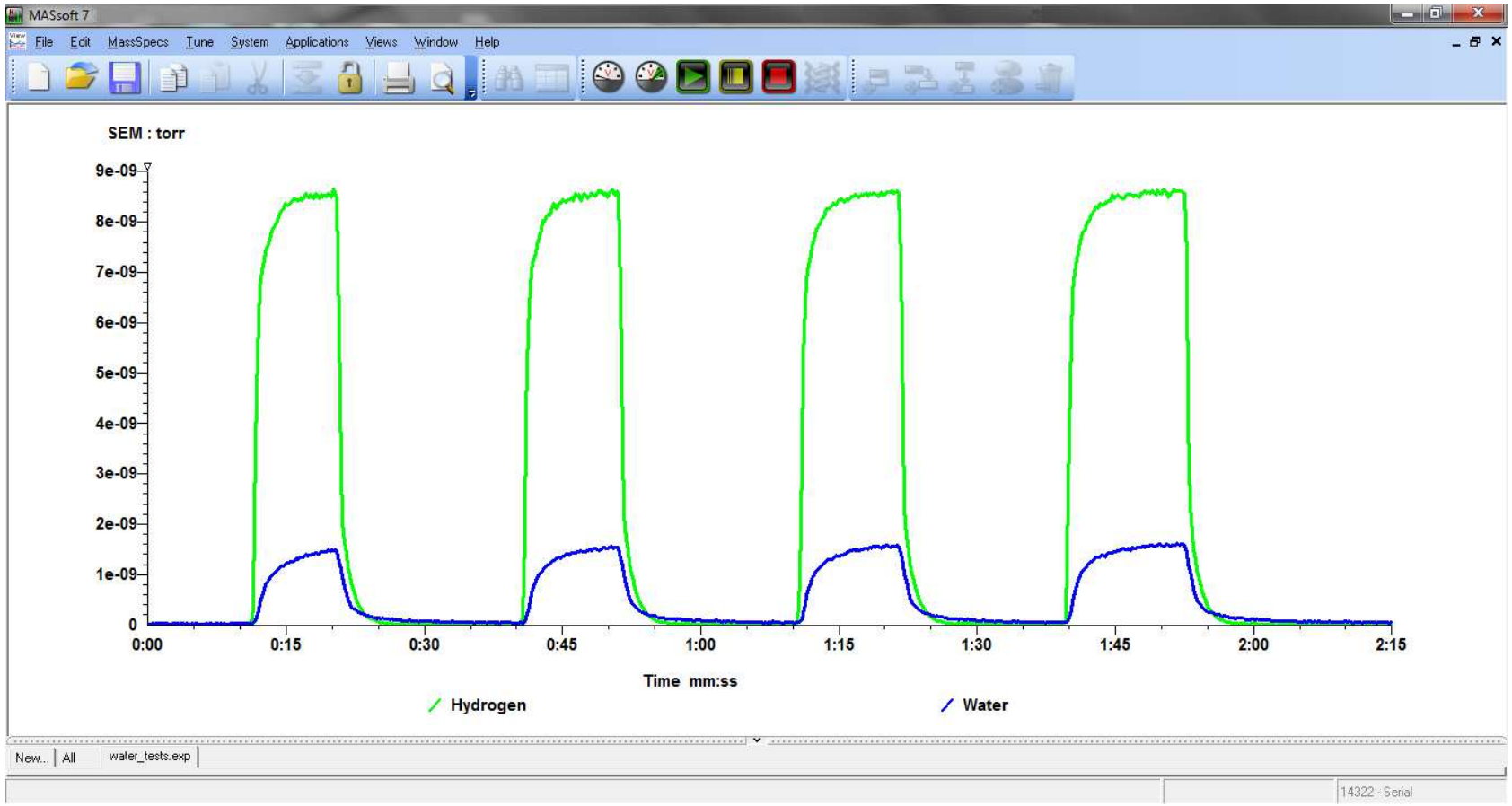

Data shows the response of the QIC inlet to gas and vapour during switching between a dry He stream and a wet H_2 and Ar flow. For clarity, only the H_2 and H_2O data is shown in the graph.

QIC BioStream

Modular multi stream off gas analyser, bench top or cart configured for analysis of:

8, 20, 40 or 80 sample streams

for:

- high flow ~ up to 12 l/min sample flow

Or

- 20, 40 or 80 sample streams

  for:

- low flow small volume reactors – 4 ml/min sample flow

For flow rates up to 12 l/minute the QIC BioStream can measure selected stream flow rate.
For higher flow rates, sample flow is connected to the QIC BioStream via a T piece.

QIC BioStream-C bench top system

Modular configuration:

Small footprint instrument:

535mm deep X 530mm wide

20 stream version shown
with dual mass flow meters for
accurate selected flow
measurement in the
flow range to 12 l/min.

QIC BioStream-C bench top system

Small footprint instrument:

535mm deep X 530mm wide

Top mounted Proteus Valve
20, or 40 stream versions.

20 stream version shown
with dual mass flow meters for
accurate selected flow
measurement in the flow range to
12 l/min.

Flow measurement is
for the O_2 uptake (OUR)
and CO_2 expiration rate (CER)
calculations.

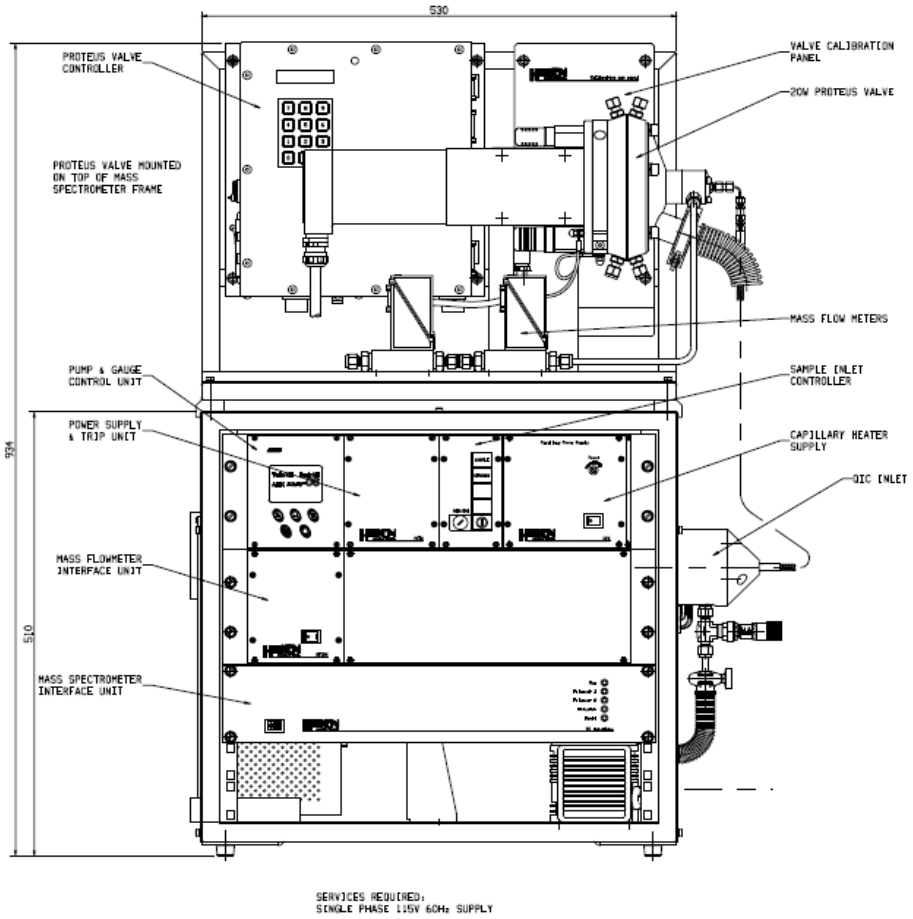

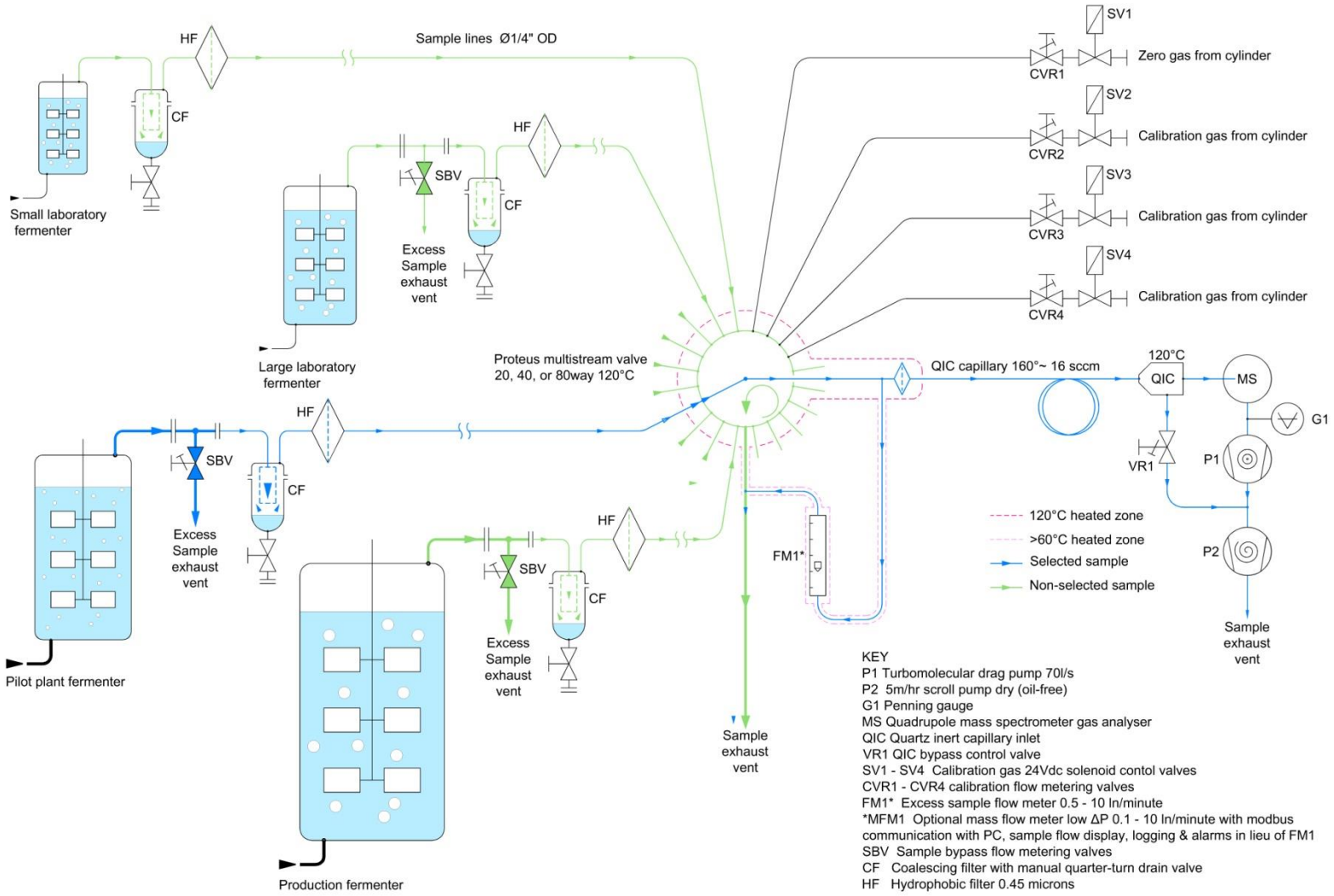
HF
Sample lines Ø1/4" OD
CF
Small laboratory fermenter
SBV
Excess Sample exhaust vent
Large laboratory fermenter
SV1
Zero gas from cylinder
CVR1
SV2
Calibration gas from cylinder
CVR2
SV3
Calibration gas from cylinder
CVR3
SV4
Calibration gas from cylinder
CVR4
Proteus multistream valve 20, 40, or 80way 120°C
QIC capillary 160°~ 16 sccm
120°C
QIC
MS
G1
VR1
P1
P2
Sample exhaust vent
FM1*
Pilot plant fermenter
Production fermenter
120°C heated zone
>60°C heated zone
Selected sample
Non-selected sample
KEY
P1 Turbomolecular drag pump 70l/s
P2 5m/hr scroll pump dry (oil-free)
G1 Penning gauge
MS Quadrupole mass spectrometer gas analyser
QIC Quartz inert capillary inlet
VR1 QIC bypass control valve
SV1 - SV4 Calibration gas 24Vdc solenoid contol valves
CVR1 - CVR4 calibration flow metering valves
FM1* Excess sample flow meter 0.5 - 10 ln/minute
*MFM1 Optional mass flow meter low ΔP 0.1 - 10 ln/minute with modbus communication with PC, sample flow display, logging & alarms in lieu of FM1
SBV Sample bypass flow metering valves
CF Coalescing filter with manual quarter-turn drain valve
HF Hydrophobic filter 0.45 microns

QIC BioStream switching time between sample streams in > 0.6 seconds

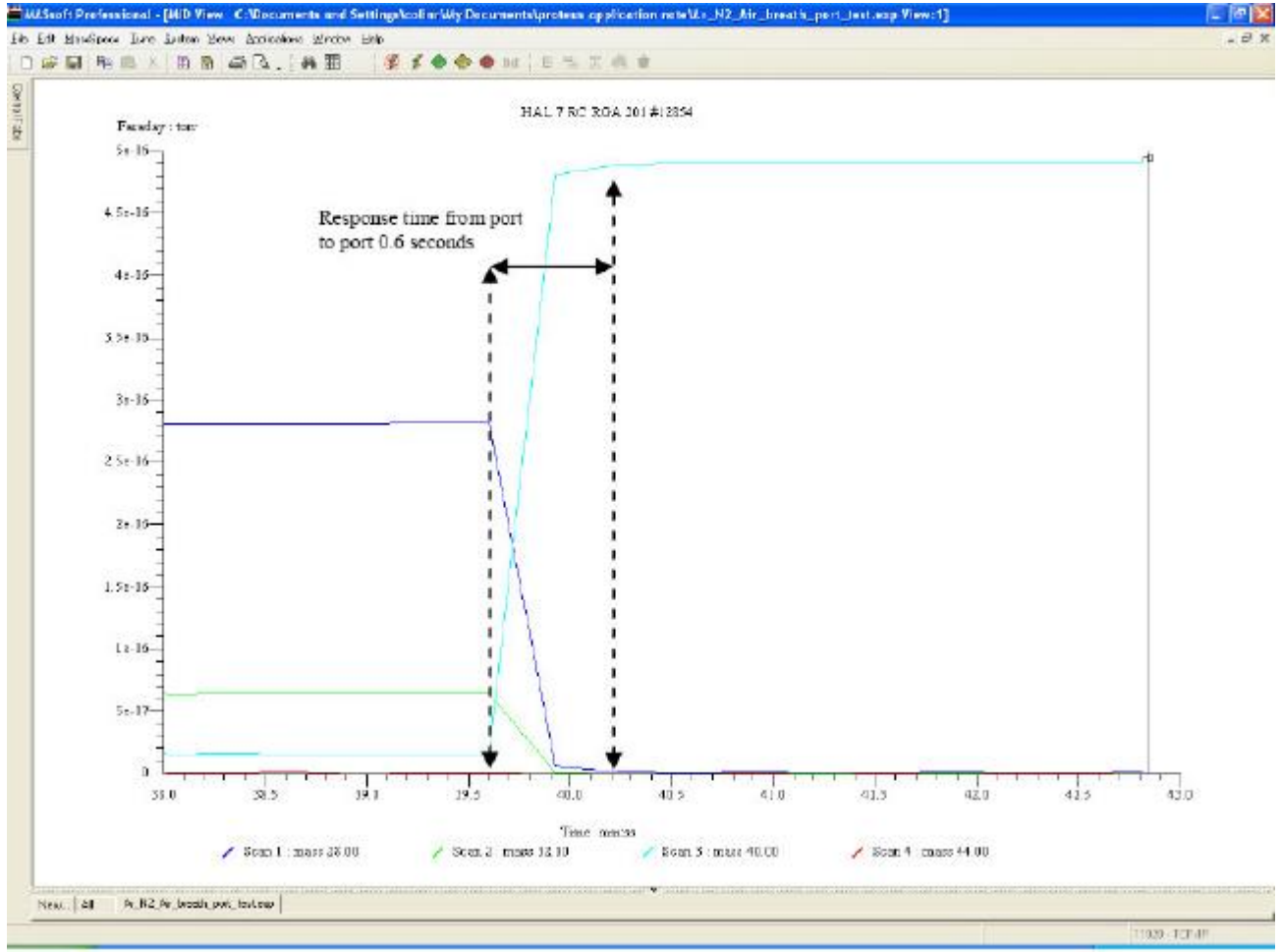

Hiden Proteus Multistream Valve	
Type	Gas Selector valve - relies on novel face sealing technology to provide effective sealing with long life.
Max Operating Temperature	120°C
Minimum Sample Flow	Not applicable - Determined by analyser (no sample lost)
'Crosstalk' from other samples	Zero
Number of operations before maintenance	>6 x 106
Memory (carry over) From previous sample	Class leading low memory due to minimised internal switching volume and low sample wetted surface area. The face seal is isolated from the sample by a secondary internal seal.
Number of ports	20, 40, 80
Actuation	Direct drive, high torque microstepping motor with IP65 protected incremental rotary encoder providing home z-position and closed loop motion control. Full motion management including intelligent acceleration/deceleration, position maintenance, bi-directional drive and position error annunciation.

Positioning accuracy	+/- 0,09°
Full brown-out sensing and protection	Yes
Communication (valve port position select)	Binary, BCD RS232C
Available as separate product	Yes

Triple Filter Quadrupole Mass Spectrometer

- Precision machined ceramic supports
- Independently driven RF pre and post filters
- Long term stable operation

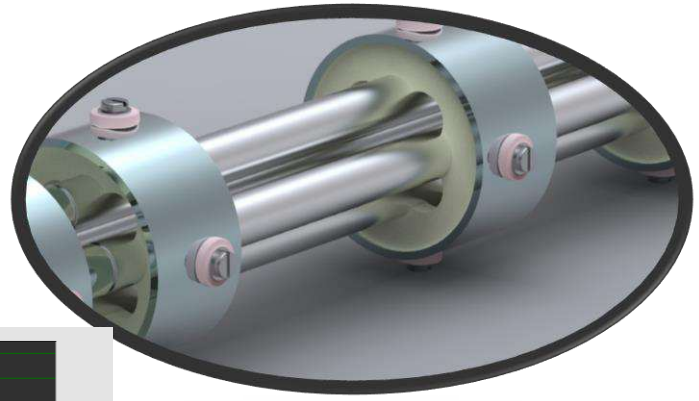

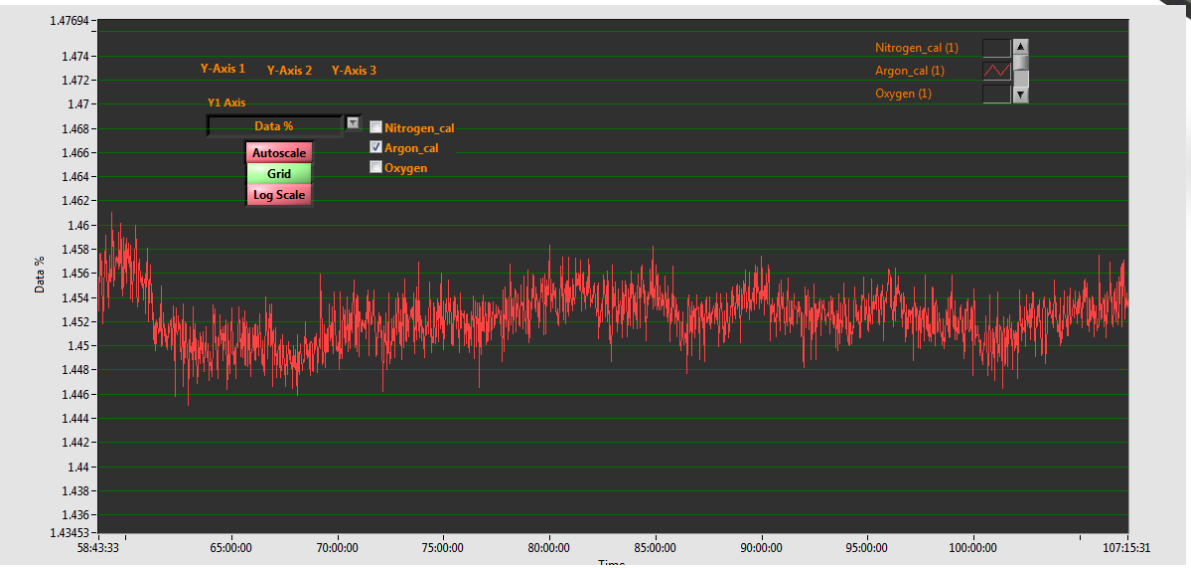

- Oxygen , Nitrogen and Argon measured over 110 hours
- Data shows stability of the Argon signal for an extended period

QGA Software
Quantitative gas analysis software

Template operation from pre-defined analysis set up for up to 32 gases and vapours.

Automatic data acquisition.

Data export
OPC and/or direct to Excel

Multi stream capability for up to 80 gas sample streams

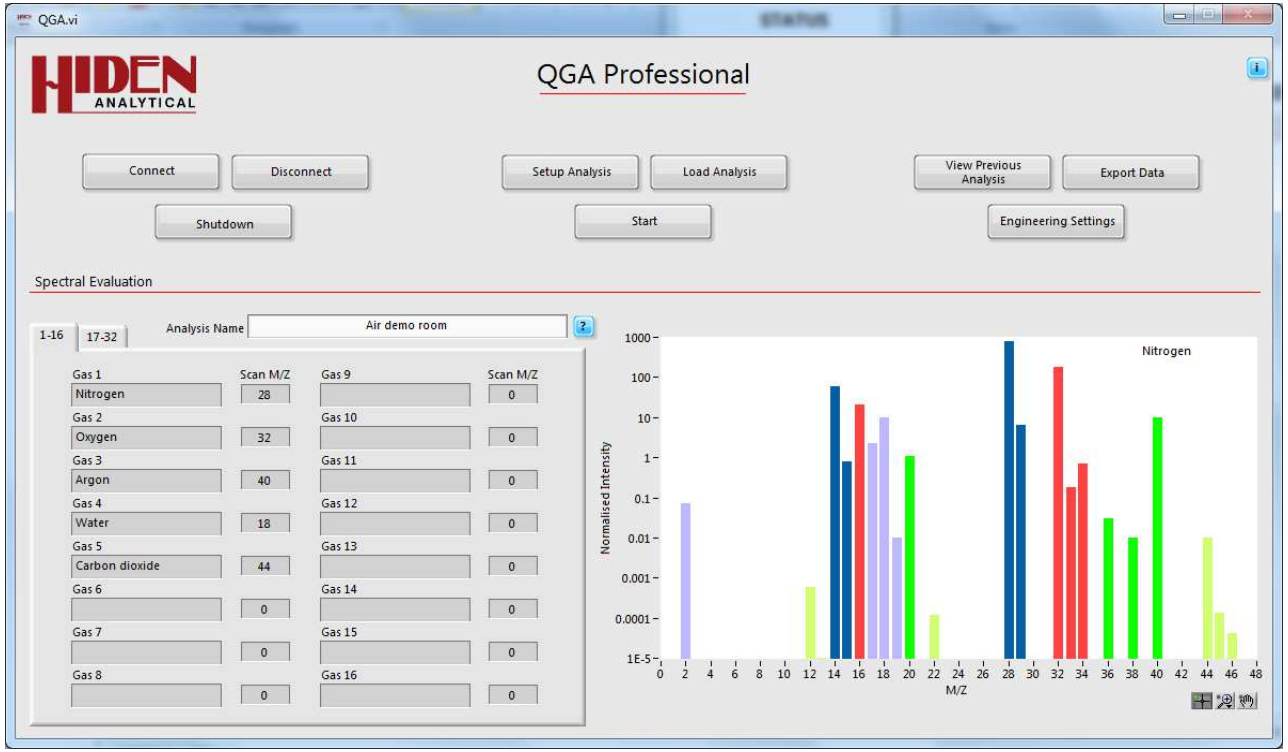

Multiple stream sequence set up - 80 stream example

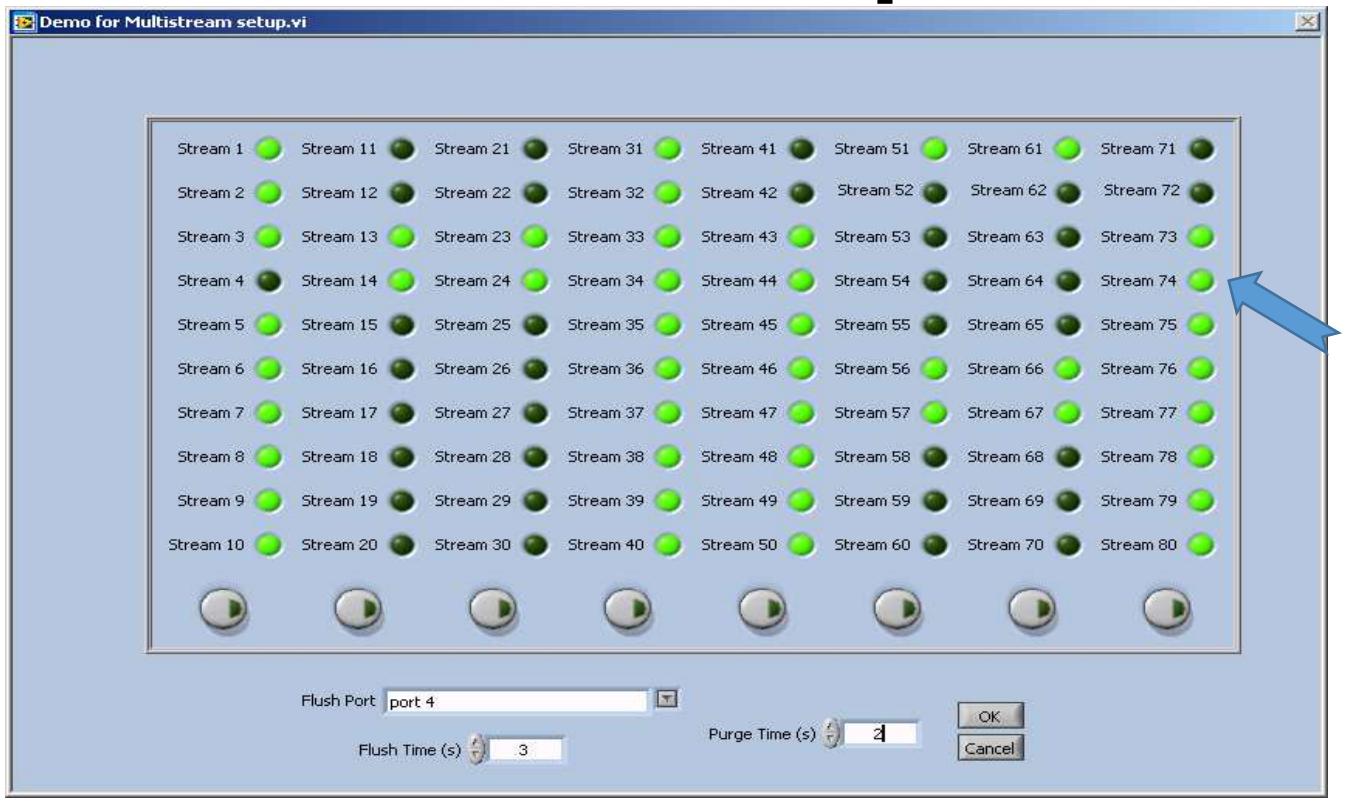

Click to add or subtract a stream from the analysis sequence

Fermenters can be added or subtracted from the stream sequence at any time during the analysis with a simple click on the stream LED.

Multi stream gas analysis - The real time trend analysis of up to 4 selected streams can be viewed in real time and in review

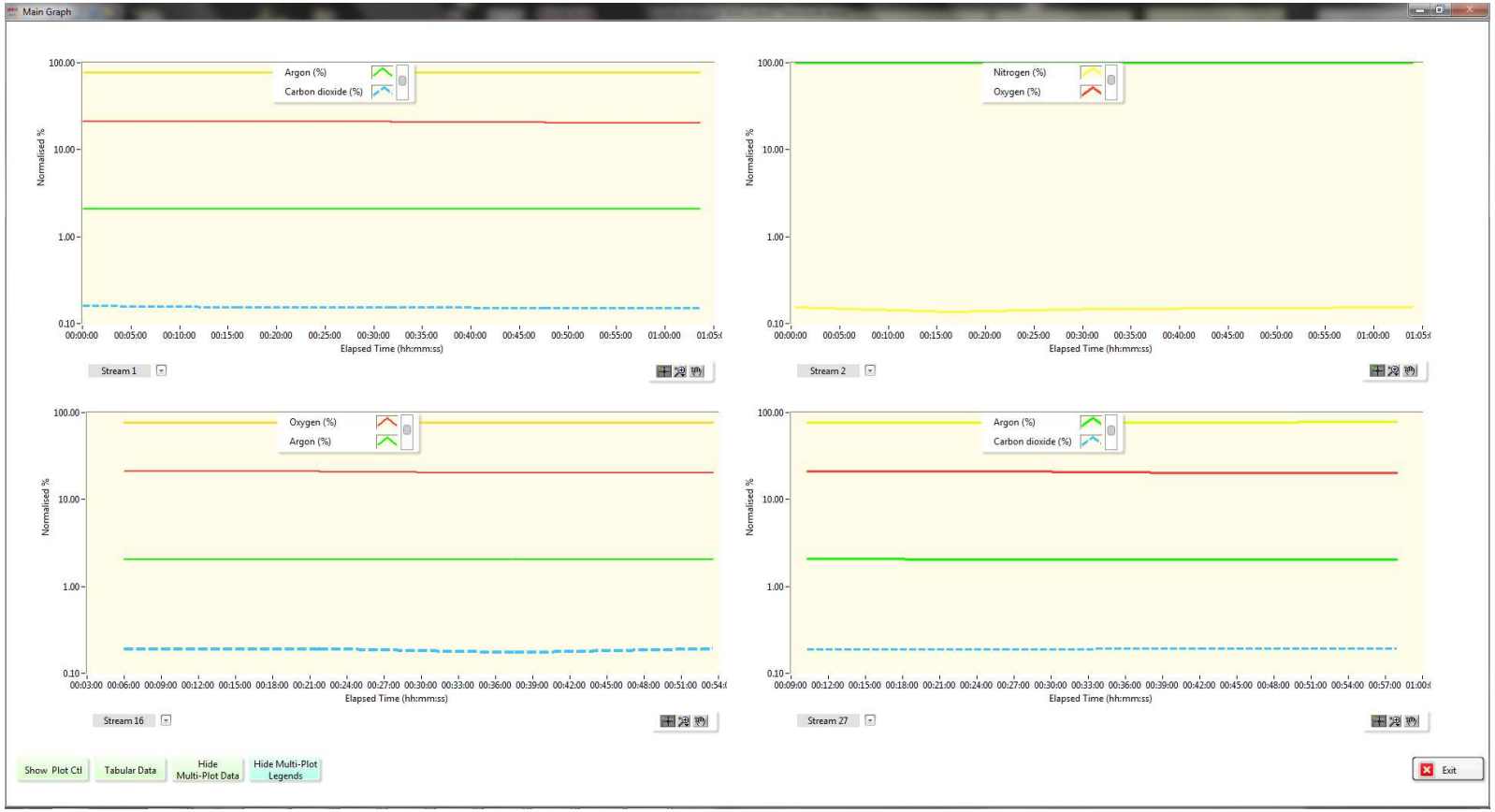

Data Export

- Data export to MS Excel.
- New workbook for each data file.
- Quantitative data, raw data values and corrected data values are exported.
- Calibration factors and background correction values are recorded.
- The workbook contains a worksheet for each gas stream.

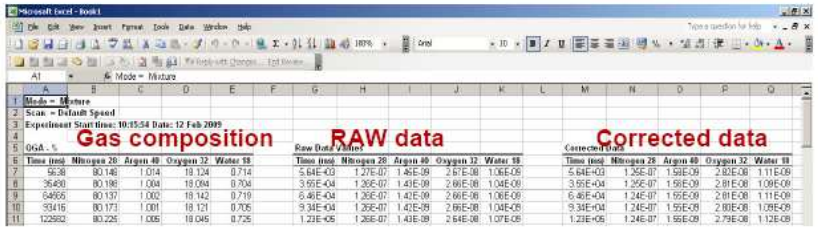

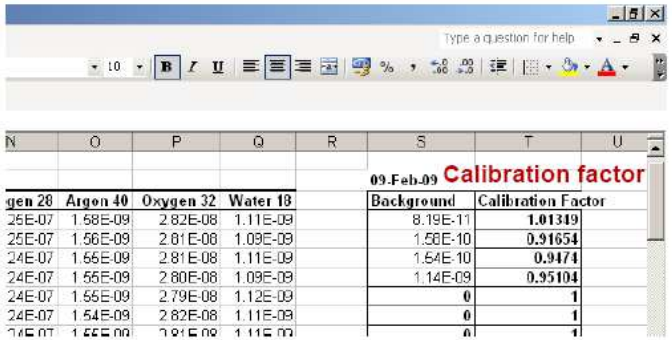

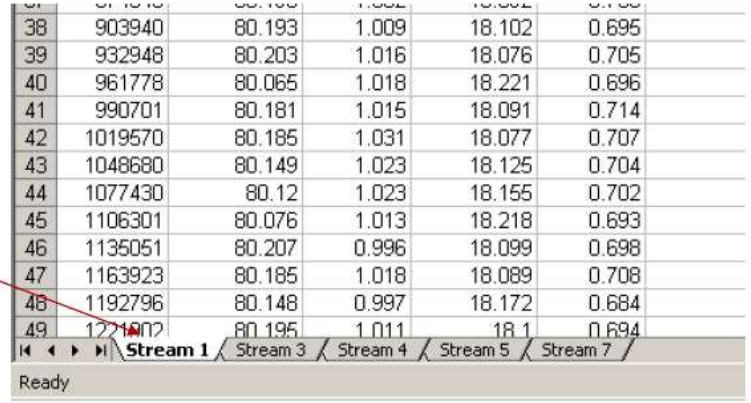

Data for up to 80 gas sample streams

OPC – Data Output

The screen shot is from an OPC data viewer
showing data tags for each stream and for each gas channel.

RQ/CER/OUR data can be output for each stream

OPC data can be selected as raw, corrected or %,PPM values

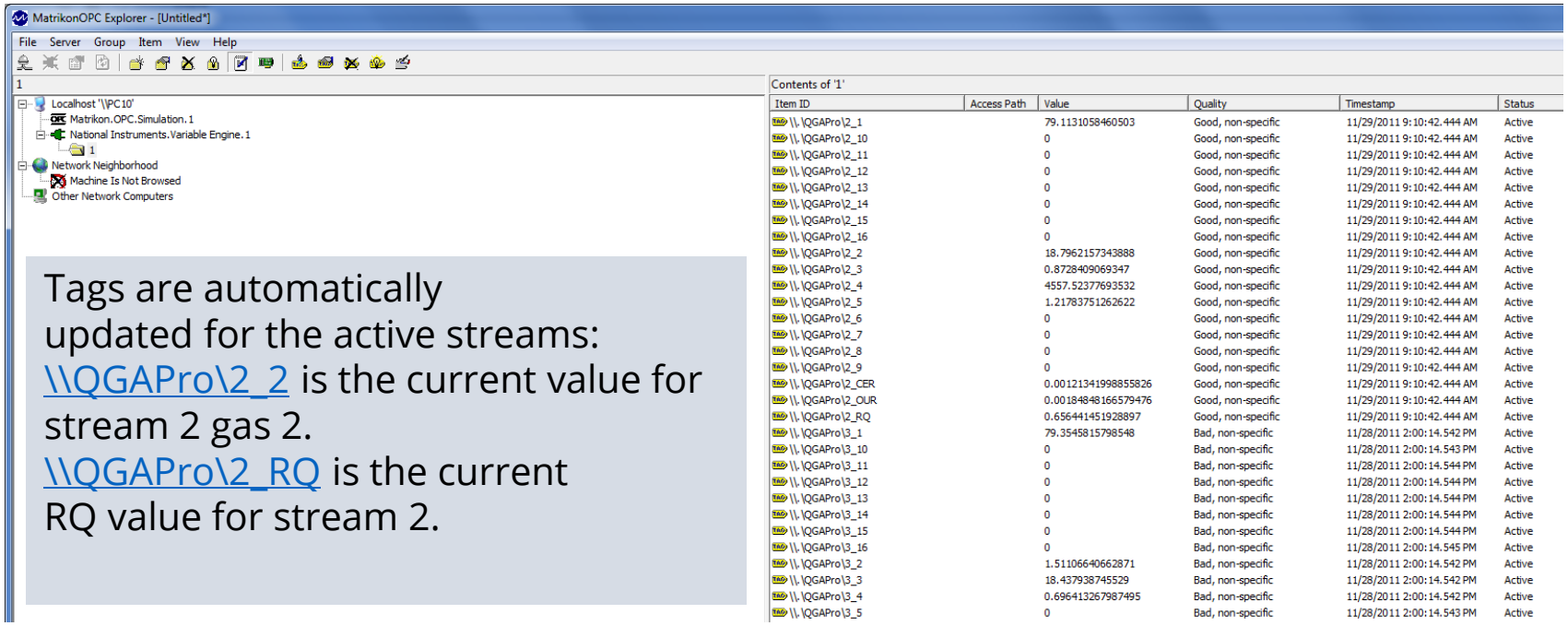

Item ID	Access Path	Value	Quality	Timestamp	Status
\\.\QGAPro\2_1		79.1131058460503	Good, non-specific	11/29/2011 9:10:42.444 AM	Active
\\.\QGAPro\2_10		0	Good, non-specific	11/29/2011 9:10:42.444 AM	Active
\\.\QGAPro\2_11		0	Good, non-specific	11/29/2011 9:10:42.444 AM	Active
\\.\QGAPro\2_12		0	Good, non-specific	11/29/2011 9:10:42.444 AM	Active
\\.\QGAPro\2_13		0	Good, non-specific	11/29/2011 9:10:42.444 AM	Active
\\.\QGAPro\2_14		0	Good, non-specific	11/29/2011 9:10:42.444 AM	Active
\\.\QGAPro\2_15		0	Good, non-specific	11/29/2011 9:10:42.444 AM	Active
\\.\QGAPro\2_16		0	Good, non-specific	11/29/2011 9:10:42.444 AM	Active
\\.\QGAPro\2_2		18.7962157343888	Good, non-specific	11/29/2011 9:10:42.444 AM	Active
\\.\QGAPro\2_3		0.8728409069347	Good, non-specific	11/29/2011 9:10:42.444 AM	Active
\\.\QGAPro\2_4		4557.52377693532	Good, non-specific	11/29/2011 9:10:42.444 AM	Active
\\.\QGAPro\2_5		1.21783751262622	Good, non-specific	11/29/2011 9:10:42.444 AM	Active
\\.\QGAPro\2_6		0	Good, non-specific	11/29/2011 9:10:42.444 AM	Active
\\.\QGAPro\2_7		0	Good, non-specific	11/29/2011 9:10:42.444 AM	Active
\\.\QGAPro\2_8		0	Good, non-specific	11/29/2011 9:10:42.444 AM	Active
\\.\QGAPro\2_9		0	Good, non-specific	11/29/2011 9:10:42.444 AM	Active
\\.\QGAPro\2_CER		0.00121341998855826	Good, non-specific	11/29/2011 9:10:42.444 AM	Active
\\.\QGAPro\2_OUR		0.00184848166579476	Good, non-specific	11/29/2011 9:10:42.444 AM	Active
\\.\QGAPro\2_RQ		0.656441451928897	Good, non-specific	11/29/2011 9:10:42.444 AM	Active
\\.\QGAPro\3_1		79.3545815798548	Bad, non-specific	11/28/2011 2:00:14.542 PM	Active
\\.\QGAPro\3_10		0	Bad, non-specific	11/28/2011 2:00:14.543 PM	Active
\\.\QGAPro\3_11		0	Bad, non-specific	11/28/2011 2:00:14.544 PM	Active
\\.\QGAPro\3_12		0	Bad, non-specific	11/28/2011 2:00:14.544 PM	Active
\\.\QGAPro\3_13		0	Bad, non-specific	11/28/2011 2:00:14.544 PM	Active
\\.\QGAPro\3_14		0	Bad, non-specific	11/28/2011 2:00:14.544 PM	Active
\\.\QGAPro\3_15		0	Bad, non-specific	11/28/2011 2:00:14.544 PM	Active
\\.\QGAPro\3_16		0	Bad, non-specific	11/28/2011 2:00:14.545 PM	Active
\\.\QGAPro\3_2		1.51106640662871	Bad, non-specific	11/28/2011 2:00:14.542 PM	Active
\\.\QGAPro\3_3		18.437938745529	Bad, non-specific	11/28/2011 2:00:14.542 PM	Active
\\.\QGAPro\3_4		0.696413267987495	Bad, non-specific	11/28/2011 2:00:14.542 PM	Active
\\.\QGAPro\3_5		0	Bad, non-specific	11/28/2011 2:00:14.543 PM	Active

Tags are automatically updated for the active streams: \\QGAPro\2_2 is the current value for stream 2 gas 2. \\QGAPro\2_RQ is the current RQ value for stream 2.

Real time data export , system control and I/O for process control

Three options for output of real time data

- OPC for process control providing real time data tags from QGA Pro software.
- RS232 streamed data in ascii format from the mass spectrometer interface unit.
- Socket interface for windows client compatible applications with MASsoft Pro software.

System control and outputs

- 5 I/O for TTL signal control for automatic operation- start /stop for example.
- Up to 16 channel signal output options -0-10V analogue outputs.

System data logging

- Three RS485 inputs provide for up to three device type protocols for reading data from external devices, temperature for example. Synchronously logged and displayed with the mass spectrometer data.
- Up to 16 channel signal output options as 0-10V analogue.

QIC BioStream gas analyser for sampling fermentors with sample flow rates in the range of litres /min to 0.1 l/min

- Small diameter sample tubing is used to connect the QIC BioStream to the fermentors.
- Sample gas flow through the sample tubing is induced by creating a pressure gradient along the tube.
- The sample flow may be achieved by running the fermentor at a positive pressure & venting the sample flow to ambient pressure after analysis.
- Alternatively, a sampling pump may be connected to the analyzer exhaust.
- This type of system will typically accept individual sample flow rates from several litres/minute to 0.1 litres/minute. Sample transit times become unacceptably long (several minutes) below 0.02 litres/minute.
- Small fermentors and miniature reactors use the low flow configuration with flow rate < 4ml/minute.

QIC BioStream gas analyser for small fermentors with very low flow 4ml/min

- The QIC BioStream low flow system utilizes the unique capability of the Proteus multistream selector valve to operate under very low pressure (vacuum) conditions.
- This system is optimized for fast response with very low sample flow rates. This is achieved with small-bore capillary tubing. The sampling lines then become the 1st stage of the inlet pressure reduction system. The exhaust of the Proteus valve is connected to the dry scroll pump to provide a vacuum of a few mbars absolute within the valve.
- Atmospheric pressure sample gas enters the capillary sample tubing at the sampling point at 1.8 metres/sec (typical for 0.2mm ID x 2.0 metre sampling capillary) then accelerates rapidly along the tubing due to the progressive expansion of the sample.
- For example, 4 ml/minute atmospheric flow expands to 4 x >200 = 800 ml/min (0.8 litres/minute
- This increase in sample volume flow rate provides rapid sample transit along the sampling capillary & the fast switching response, switching time between sample streams is < 0.6 seconds.

Connecting to fermenters with low flow

20, 40 or 80 way systems are available in low flow configuration.

Low flow 40 way Proteus multistream sampling valve Configuration. The Proteus multi stream valve is close coupled to the mass spectrometer vacuum for low flow.

Sampling lines for low flow sampling , female luer lock fittings, shown with disposable hydrophobic filters< operates with flow ~ 4ml/min.

Sample conditioning for the analyser

The QIC BioStream off gas analyser requires sample to be:

Non condensing.

A hydrophobic filter should be included
in each sample line to avoid water droplets entering the analyser.

and without any foam or overspill.

For larger reactors a simple foam trap in the sample line avoids liquid entering the analyser.

For advice on how to connect fermenters to Hiden's QIC BioStream real time gas analyser- please send a schematic detailing your fermenter layout, flow rates, and gas/vapour species.

Summary – QIC BioStream for off gas analysis

QIC BioStream – cart or compact bench top configuration

Off gas analysis for 8, 20, 40, or 80 streams

Analysis of gases and vapours

Triple filter quadrupole mass spectrometer

OUR/CER/RQ

Data output though OPC shared variable engine

Lifetime application and service support

QIC BioStream mobile cart

QIC BioStream-C bench top