Hiden HPR-60

Molecular Beam Mass Spectrometer (MBMS) for the quantitative analysis of reactive gas species

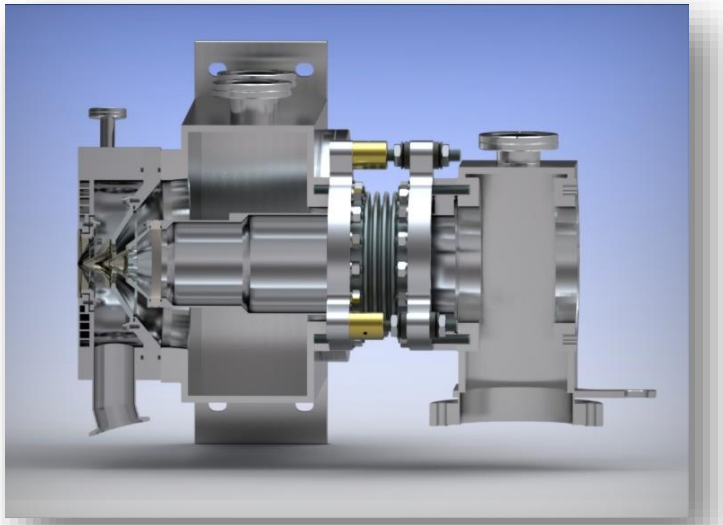

HPR-60 Overview

- The Hiden HPR60 Molecular Beam Mass Spectrometer (MBMS) is a compact, mobile gas analysis system for the quantitative analysis of reactive gas species.

- Radicals, ions, polymers and clusters are sampled via a multistage differentially pumped inlet, forming a molecular beam that is transferred to the ion source of a precision triple filter quadrupole mass spectrometer.

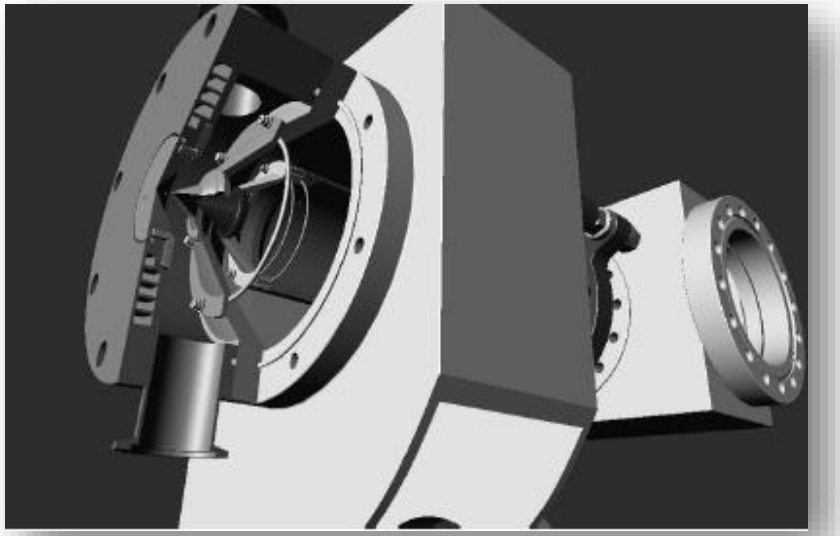

HPR-60 System Schematic

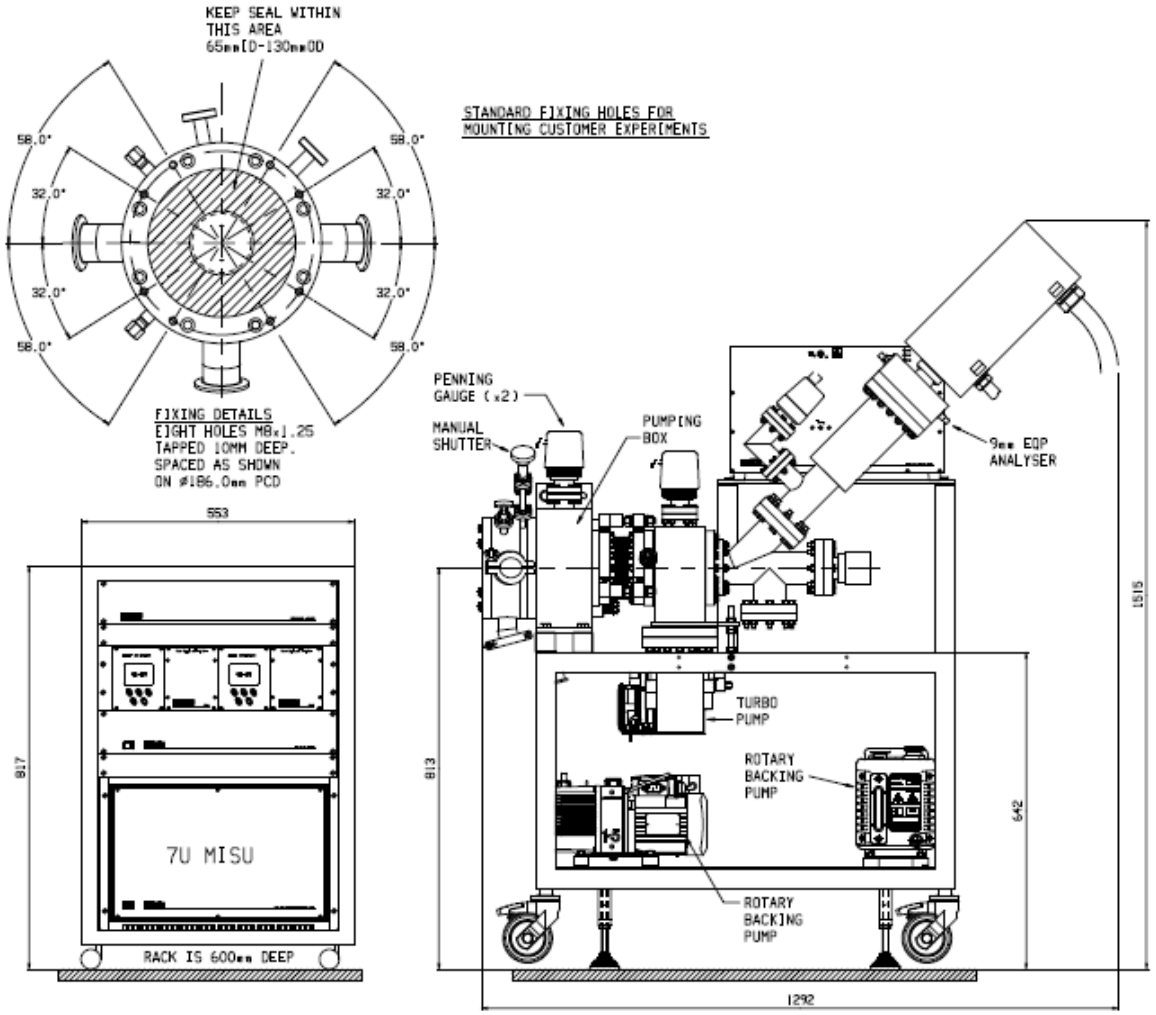

HPR-60 Features

- Molecular beam sampling at atmospheric pressure
- +ve and -ve ion analysis
- User replaceable skimmer
- Cones (can be biased)
- Electron attachment ionisation mode for the study of electro-negative radicals
- APSI-MS soft ionisation mode for radicals analysis
- Mass range options: 300, 510 or 1000 amu
- Energy range options 100 eV or 1000 eV

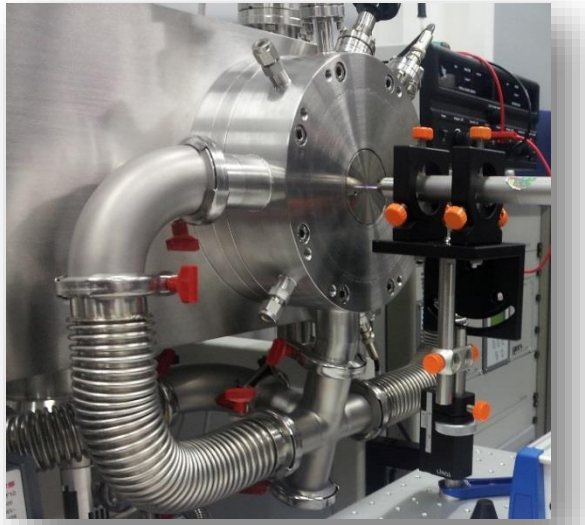

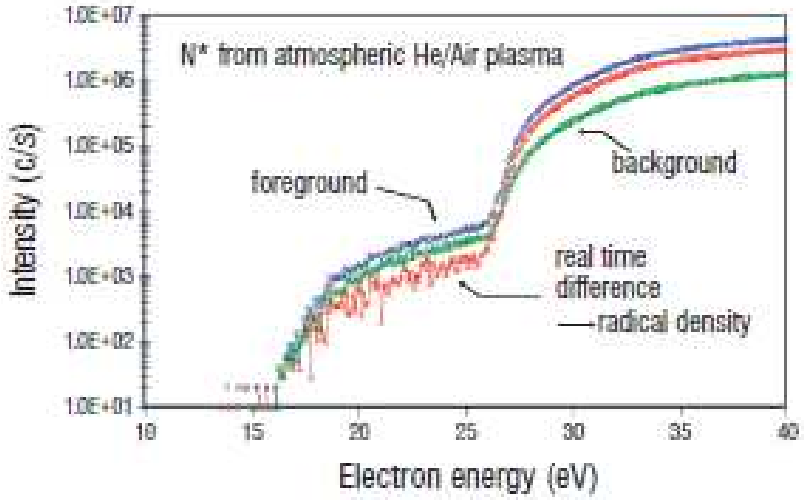

HPR-60 Applications

Both two and three stage differentially pumped versions are available to address a broad range of applications covering the pressure range 10-4 mbar to atmospheric, including reaction kinetics in;

- Environmental and atmospheric chemistry
- Low and high pressure plasma chemistry
- Catalytic reactors
- CVD / MOCVD
- Combustion chemistry
- Flame chemistry

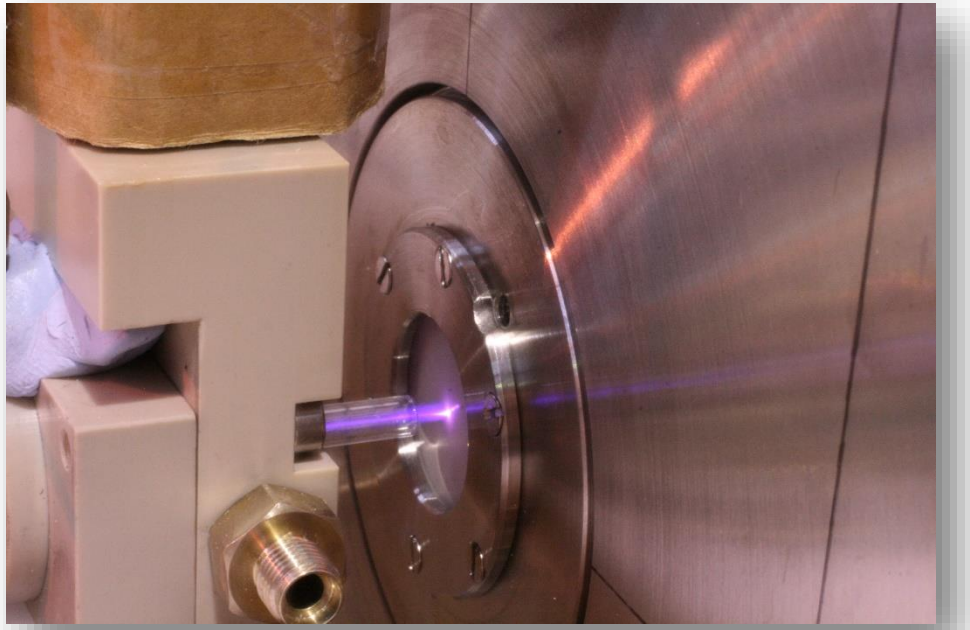

HPR60 Typical Operating Pressures

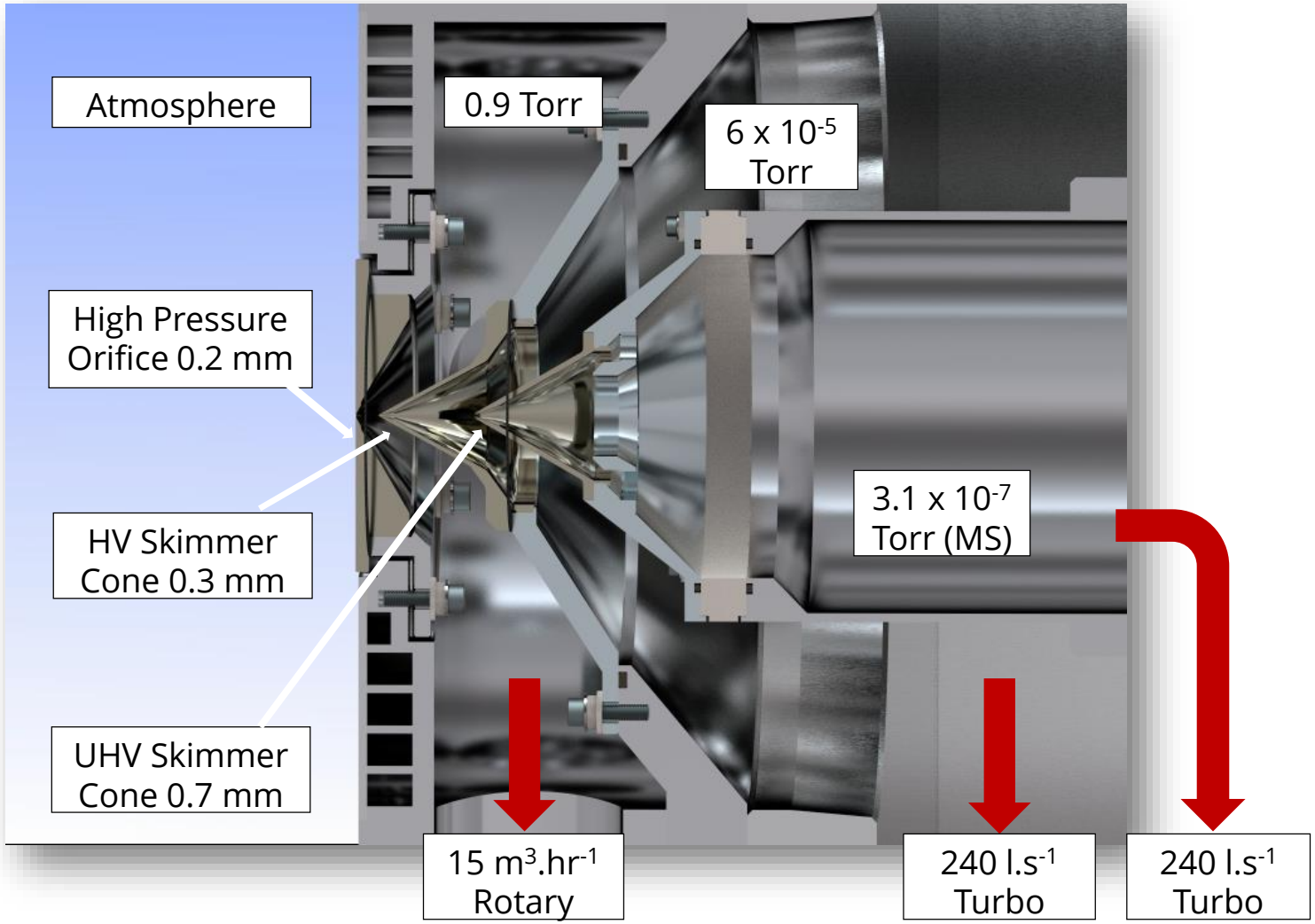

HPR-60 Water Cooled Stage for High Temperature Measurements

- Water cooled channels are offered as standard, with optional chiller.
- Special graphite seal allows heat conduction from the orifice.
- Assuming water cooling is used at a flow rate of ~1 $l.min^{-1}$, with 20 ºK rise. A cooling power of 1.3 kW is obtained.
- For higher temperature applications, ceramic cones and heat shield are also offered.

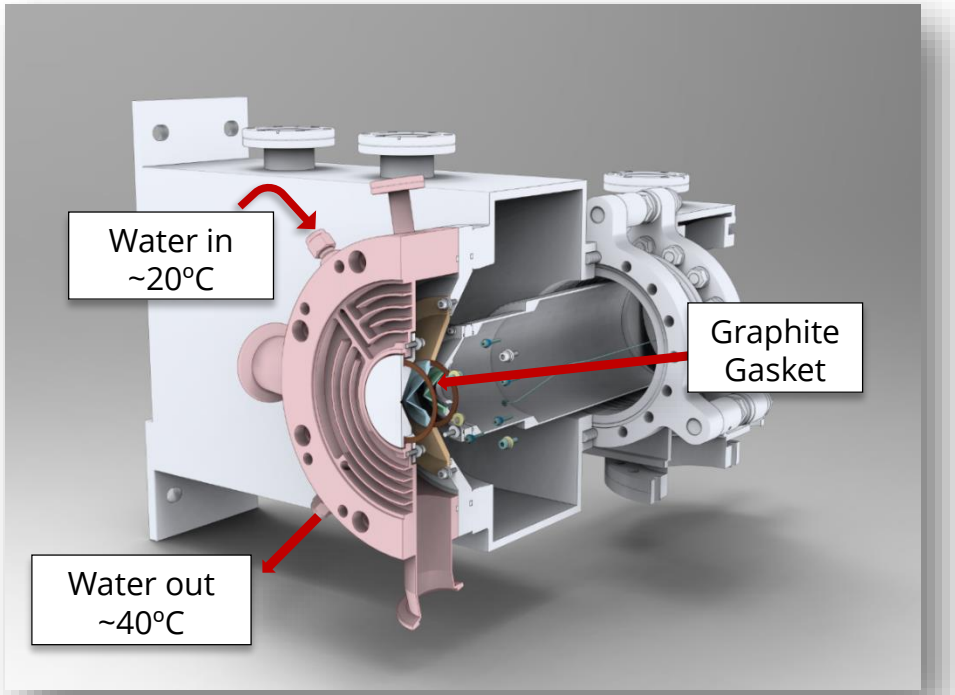

HPR-60 Cones

- Control the pressure differential obtained through stages 1, 2, and 3.
- Standard orifice sizes– suitable for sampling from around atmospheric pressure as standard. Other pressure regimes are catered for.
- Radicals are sampled via a multi stage, differentially pumped skimmer inlet. Sampling is carried out in the supersonic 'mach disc' region, interactions with other species and chamber walls are negligible.
- Other metal and ceramic cones available – Please contact Hiden for more details.

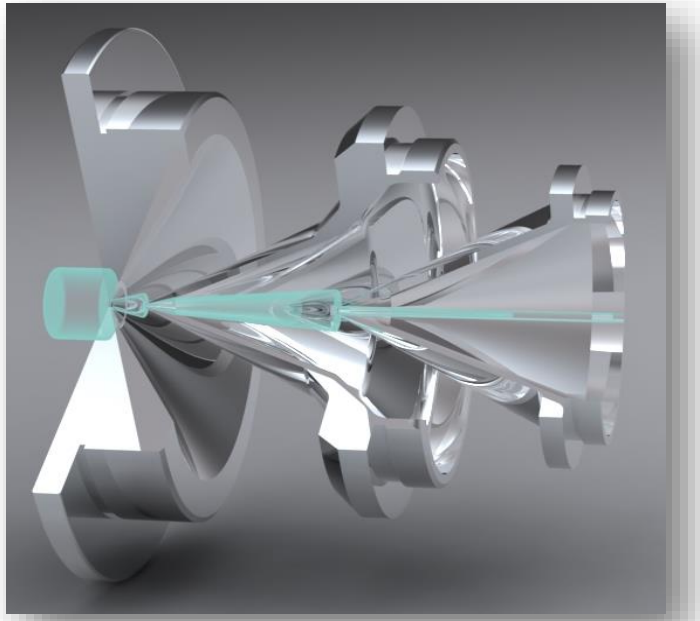

HPR-60 Mass Spectrometer Selection

EPIC Probe

- Sub PPM detection of plasma ions, neutrals and radicals.
- Mass ranges of 0-50, 0-300, 0-500 & 0-1000 amu available.

EQP Probe

- Sub PPM detection of plasma ions, neutrals and radicals.
- Ion Energy Analysis, 45° sector energy analyser with 0.25 eV resolution
- Mass ranges of 0-50, 0-300, 0-500 & 0-1000 amu available.

EPIC Probe – Mass Analyser

EQP Probe – Mass/Energy Analyser

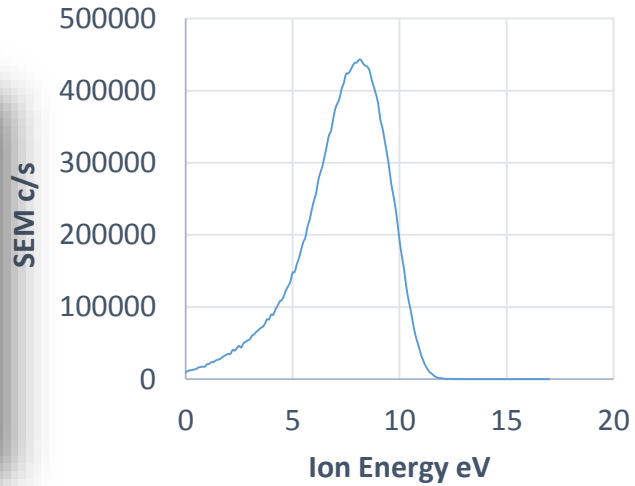

Typical EQP Energy Spectrum from an atmospheric Plasma Discharge.

EQP Extraction Optics

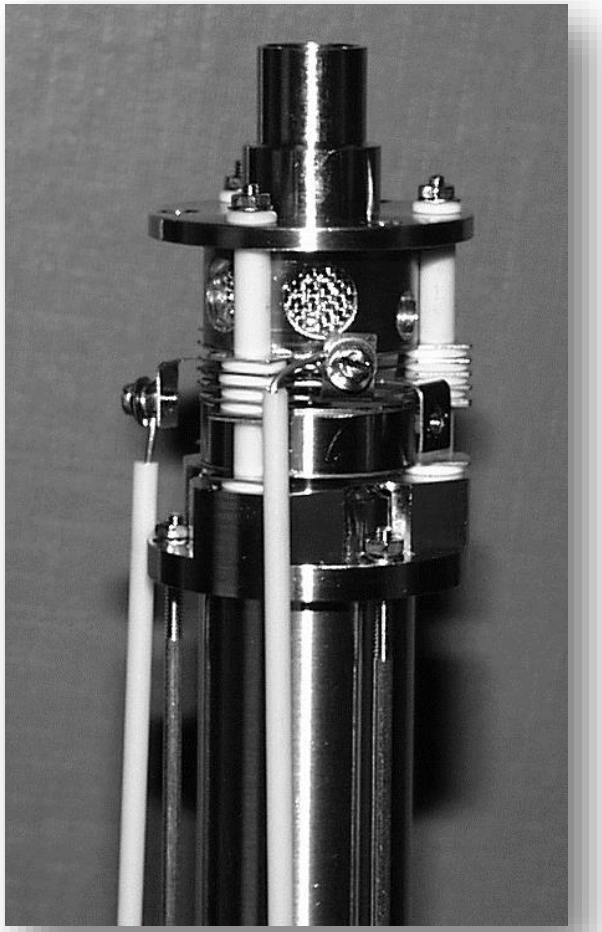

- Software controlled Extraction / Focus
- Discriminates +ve, -ve, e^-, radicals
- Fully tuneable for optimal detection
- Integrated ionisation source

EQP 45° Electrostatic Sector Analyser

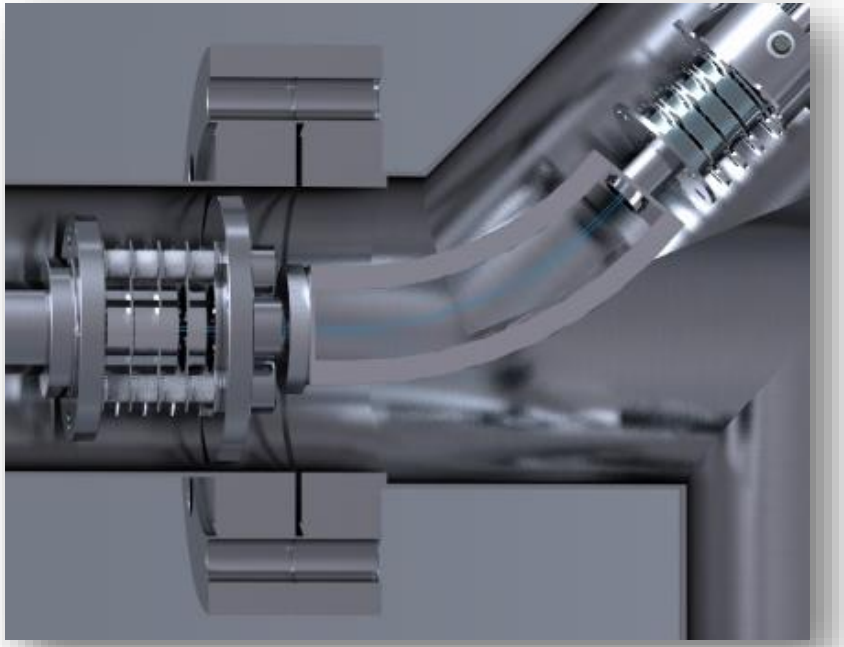

- Optimum transmission cf. Bessel box.
- Minimum perturbation of ion flight path.
- Constant ion transmission at all energies.
- Energy resolution down to 0.25 eV FWHM.
- Energy scan at increments from 0.05 eV .
- Floating option up to 10 KeV.

Triple Filter Mass Spectrometer

Why have a triple filter?

Two main advantages:

1. Strict control over the quadrupole entrance and exit fields provides enhanced sensitivity for high mass transmission and increased abundance sensitivity

2. Enhanced long-term stability. The bulk of the deselected ions from the quadrupole ioniser deposit harmlessly on the RF-only pre-filter stage, minimising contamination on the mass selective primary filter

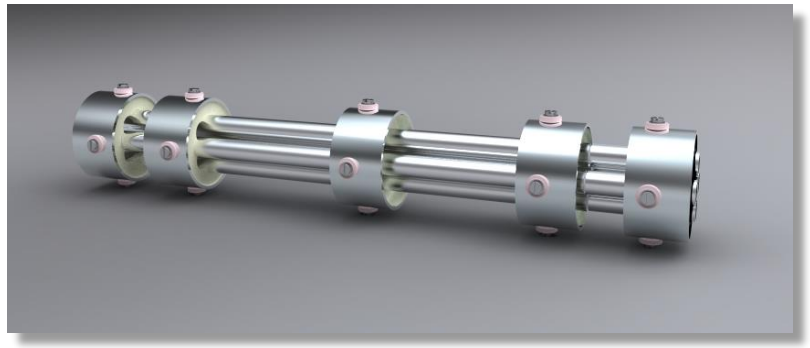

Secondary Electron Multiplier (SEM) Detector

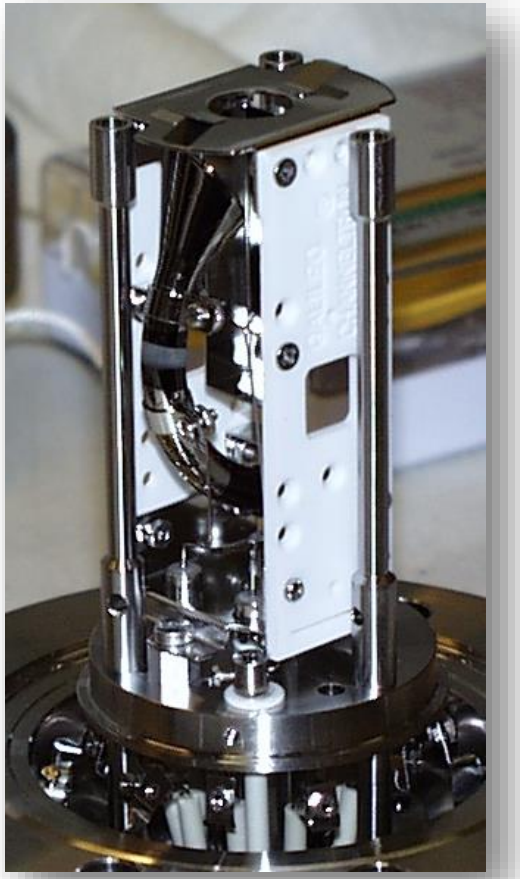

- 7 decade continuous dynamic range.
- 24 bit counter for 1c /s resolution.
- Faraday Cup option for high density plasmas.
- Signal gating with 1 μs resolution energy & mass distributions vs time.
- TTL / DDE data export options.

Summary

- Molecular beam Mass Spectrometer (MBMS)
- Designed and manufactured by Hiden in the UK.
- Radicals, ions, polymers and clusters are sampled via a multistage differentially pumped inlet, forming a molecular beam that is transferred to the ion source of a precision triple filter Quadrupole mass spectrometer.

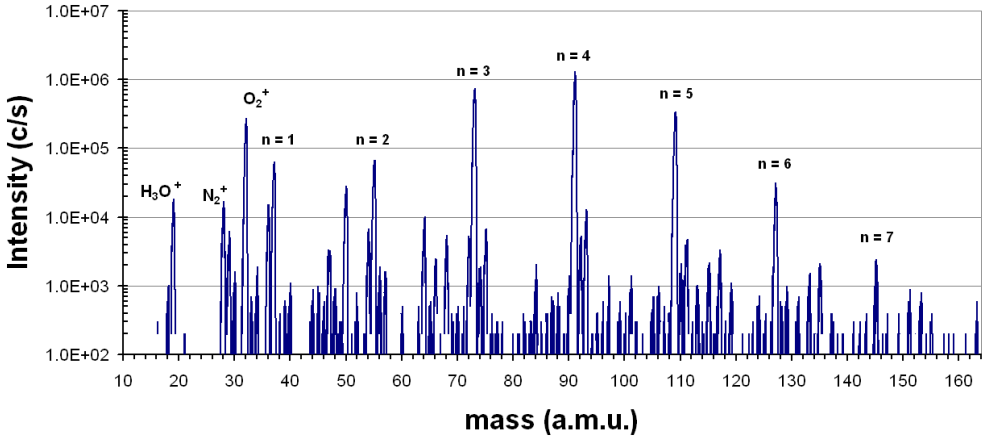

Selected Publications

- Ambient air particle transport into the effluent of a cold atmospheric-pressure argon plasma jet investigated by molecular beam mass spectrometry. 2013. M Dünnbier et al. *J. Phys. D: Appl. Phys.* **46** 435203
- The reaction mechanism of the spray Ion Layer Gas Reaction process to deposit In_2S_3 thin films. 2011. S Gledhill et al. *Thin Solid Films* **519** 6413-6419
- Atmospheric pressure plasma analysis by modulated molecular beam mass spectrometry. 2006. Y Aranda Gonzalvo et al. *J. Vac. Sci. Technol.* **A 24(3)** May/June
- A plasma needle generates nitric oxide. 2006. E stoffels et al. *Plasma Sources Sci. Technol.* **15** 501-506
- A mass spectrometric study of ions extracted from a point-to-plane dc corona discharge in N_2O at atmospheric pressure. 2008. JD Skalny et al. *J.Phys. D: Appl. Phys.* **41** 085202
- Positive Ion Mass Spectrometry during an Atmospheric Pressure Plasma Treatment of Polymers. 2009. AJ Beck et al. *Plasma Process. Polym.* **6** 521-529

Hiden HPR-60 Users

- Samsung Electronics
- Xian Jiaotong University
- KAUST
- Old Dominion University
- University College London
- Institute of Plasma Physics
- Atmospheric Afterglow Technologies
- University of Liverpool
- CEA LETI
- CBTE
- Nagoya Institute
- Oak Ridge National Laboratory
- Paul Scherrer Institut

Hiden Analytical Ltd.
420 Europa Boulevard
Warrington, WA5 7UN, England

www.HidenAnalytical.com

info@hiden.co.uk

Tel: +44 (0)1925 445 225